AS150 | NS150

BAJAJ MOTORCYCLES

AS150 | NS150

Bajaj Auto Limited
Akurdi Pune 411 035 India

Tel +91 20 27472851
Fax +91 20 27407385
www.bajajauto.com

CIN L65993PN2007PLC130076

Spare Parts Catalogue

Notice

AS150 | NS150

All information contained in this manual is based on the latest product information at the time of publication. Bajaj Auto Limited accepts no liability for any inaccuracies or omissions in this publication, although every possible care has been taken to make it as complete and accurate as possible. All procedures and specifications subject to change without prior notice. The right is reserved to make such changes at any time without prior notice and without incurring an obligation to make such changes to product manufactured previously. Contact your authorized Bajaj Dealer for the latest information on product improvements incorporated after this manual was issued.

DOC. NO.: 71112065 **REV. 01, MAY. 15**

Copy rights : All rights reserved. No part of this publicatin may be reproduced, stored in a retrival system, Or transmitted in any form or by any means, electromic mechanical photocopying, recording or otherwise, without the prior written permission of Bajaj Auto LTD.

Revision No. & Change Details

REV. NO., MM YY	PART NUMBER	SHORT DESCRIPTION	QTY.	SR. NO.	PAGE NO.	A: Add D: Delete C: Change	Reason for change
01 MAY 15	JF113407	Bracket Engine Mtg Front	1	4	46	C	Changed to 52JF0063
	JF561402	Lever comp change	1	16	20	C	Changed to JF561414
	JF561401	Tie Rod	1	12	20	C	Changed to JF561418
	JF561400	Lever Assly Gear Shift	1	10	20	C	Changed to JF561412
	JD561009	Pin Drum	1	10	18	D	Deleted
	JE521004	Sleeve	1	15	28	C	Changed to JE621004
	JE351018	Rotor Assly	1	1	38	C	Changed to JE351006
	KCBD0605	Nut	1	11	48	C	Changed to KCJD1212
	DJ151119	Panel Rear Brake	1	20	68	C	Changed to JF131601
	JC181020	Spring Washer	2	20	74	C	Changed to Dk181025
	KACB0605	Nut	2	11	76	C	Changed to KCBA0605
	JF181412	Asly Hugger Rear	1	4	90	C	Changed to JF181409

Revision No. & Change Details

REV. NO., MM YY	PART NUMBER	SHORT DESCRIPTION	QTY.	SR. NO.	PAGE NO.	A: Add D: Delete C: Change	Reason for change

Foreword

AS150 | NS150

We have pleasure in presenting the Spare Parts Catalogue for **'Pulsar AS 150 & Pulsar 150 NS'** Motorcycle. This catalogue has been specially designed to assist you in selecting the correct parts for procurement to maintain 100% availability.

The Bajaj spares are subjected to the stringent quality control standards to ensure longer life of the vehicle. It is therefore necessary that only the Genuine Bajaj Spares are used.

In a continual effort to improve Performance and Efficiency of the vehicles, Specifications, Diagrams, Illustrations and Part Numbers can change without notice. Consequently, the description in this Spare Parts Catalogue cannot therefore be final and binding on us.

The modifications / alterations which are carried out after the issue of this catalogue, will be conveyed to you through our Service Circulars. You are requested to make necessary corrections in the Parts Catalogue as per the circulars so as to keep your catalogue up-to-date. This will ensure the appropriate and speedy delivery of the Spare Parts as the order placed will bear the latest part numbers.

In case, if you need any technical assistance contact the concerned Regional Office or write to us on the following address :

Bajaj Auto Limited
Service Department
Akurdi, Pune 411 035 India
Phone : 020-27406557
Fax : 020-27407385

Instructions

AS150 | NS150

1. **How to Read the Catalogue :** Open the catalogue and from the pictorial index locate the group in which the part you want to find is present. Turn over to the concerned page number (as given by pictorial index). Now find out the figure of the part you wish to order. Write down the part number against that particular figure number from the text.

   In case, if you have the part number and you need the other details, the part index can be used. The part index (at the end of the catalogue) will give you the figure and page number of the part you wish to order.

2. **How to Order Spare Parts :** The part number and the description of the part required should be invariably mentioned in the order as per the catalogue text.

   The latest part number as conveyed through our service circulars should only appear on the order. In case of ordering painted components, colour shade of the components should be mentioned.

   The quantity shown against the part number is the quantity per vehicle for that group so that particular quantity should be multiplied by the number of sets required.

3. **Part Number System :** We have used 8 digit system for part numbers. The model or hardware item is indicated by first two digits or alphanumeric, the next two or four digits indicate main group and the last four or two digits indicate serial number in main group or serial number or subgroup of fastener respectively. Thus the part numbers will be indicated by 2-2-4 or 2-4-2 digit system. Understanding this system will enable you to identify the spare parts easily.

4. **Abbreviations :** The following abbreviations are used in this catalogue.

Assly	Assembly	V	Volts
N.I.	Not illustrated	W	Watts
C'case	Crankcase	Accl.	Accelerator
Cyl	Cylinder	Comp.	Complete
O/s	Over size	Fr.	Front
Rr.	Rear	Std.	Standard
L	Length	A/t.	Alternate
R.H.	Right hand	L.H.	Left hand
Hex.	Hexagonal	AR	As required

Index

AS150 | NS150

Plate No.	Description	Page No.
1	Cover Cylinder Head	2
2	Cylinder Head	4
3	Valve	6
4	Camshaft / Tensioner	8
5	Cylinder and Piston	10
6	Crankshaft	12
7	Balancer Assembly	14
8	Transmission	16
9	Change Drum / Shift Fork	18
10	Gear Change Mechanism	20
11	Engine Assembly / Crankcase RH	22
12	Crankcase LH	24
13	Oil Pump	26
14	Kick Starter Mechanism	28
15	Cover Clutch	30
16	Cover Magneto	32
17	Clutch Assly	34
18	Starter Assembly	36
19	Magneto, CDI and H.T. Coil	38
20	Carburettor	40
21	Air Cleaner Complete	42
22	Silencer Assembly	44
23	Engine Mountings	46
24	Seat Assembly / Seat Lock	48
25	Frame and Frame Fitting	50
26	Swing Arm / Rear Shock Absorber	52
27	Pillion Foot Rest / Holder	54
28	Mudguard- Front & Rear	56
29	Stand Assembly	58
30	Tyre/ Tube / Rim	60

Index

AS150 | NS150

Plate No.	Description	Page No.
31	Front Hub	62
32	Front Master Cylinder	64
33	Front Disc Brake	66
34	Rear Hub	68
35	Rear Disc Pedal, Brake Rod & Torque Rod	70
36	Handle Bar Assembly	72
37	Front Fork	74
38	Shroud Assembly	76
39	Petrol Tank, Cap Tank & Gauge Fuel	78
40	Fittings - Tank Cover & Flap - Pulsar 150 NS	80
41	Fittings - Fairing & Tank Cover - Pulsar AS 150	82
42	Fittings - Side Covers & Seat Cowl	84
43	Meter Assembly	86
44	Control Cables	88
45	Chain Case	90
46	Head Lamp & Fairing - Pulsar 150 NS	92
47	Head Lamp & Fairing Structure- Pulsar AS 150	94
48	Indicator Assembly	96
49	Number Plate / Tail Lamp Assly - 150 NS	98
50	Number Plate / Tail Lamp Assly - AS 150	100
51	Electrical Equipments	102
52	Tool Kit	104
53	Accessories / Grab Handle	106
54	Painted Parts & Decals - Pulsar 150 NS	108
55	Painted Parts & Decals - Pulsar AS 150	112
	Kits List For Pulsar 200 NS	115-118
	Amendment Sheet (Parts Added)	119
	Amendment Sheet (Parts Deleted)	120
	Part Index	121

PLATE NO. : 1 COVER CYLINDER HEAD	PAGE NO. 1
PLATE NO. : 2 CYLINDER HEAD	PAGE NO. 3
PLATE NO. : 3 VALVE	PAGE NO. 5
PLATE NO. : 4 CAMSHAFT / TENSIONER	PAGE NO. 7

Pictorial Index AS150 NS150

PLATE NO. : 5 CYLINDER & PISTON	PAGE NO. 9
PLATE NO. : 6 CRANKSHAFT	PAGE NO. 11
PLATE NO. : 7 BALANCER ASSEMBLY	PAGE NO. 13
PLATE NO. : 8 TRANSMISSION	PAGE NO. 15

PLATE NO. : 9 CHANGE DRUM / SHIFT FORK	PAGE NO. 17

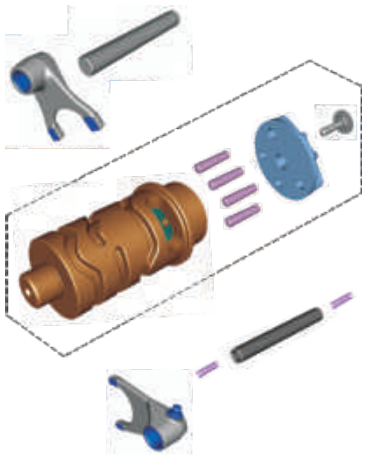

PLATE NO. : 10 GEAR CHANGE MECHANISM	PAGE NO. 19

PLATE NO. : 11 ENGINE ASSLY / CRANKCASE LH	PAGE NO. 21

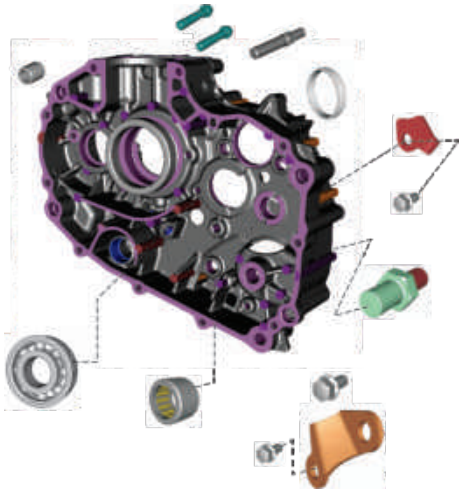

PLATE NO. : 12 CRANKCASE LH	PAGE NO. 23

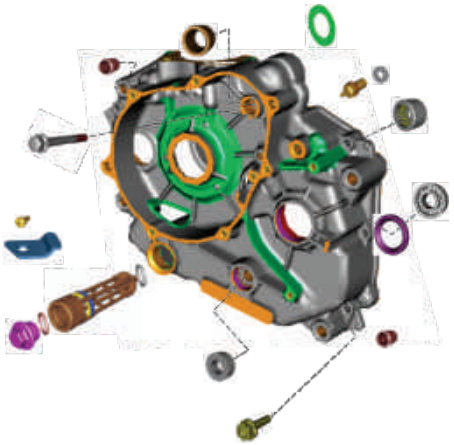

Pictorial Index AS150 | NS150

PLATE NO. : 13 OIL PUMP	PAGE NO. 25

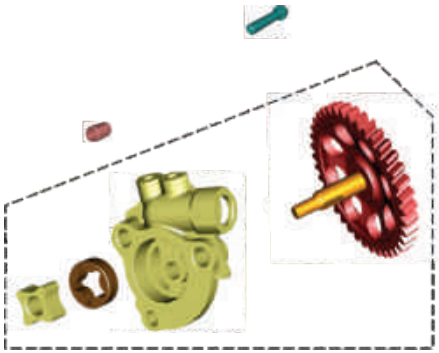

PLATE NO. : 14 KICK STARTER MECHANISM	PAGE NO. 27

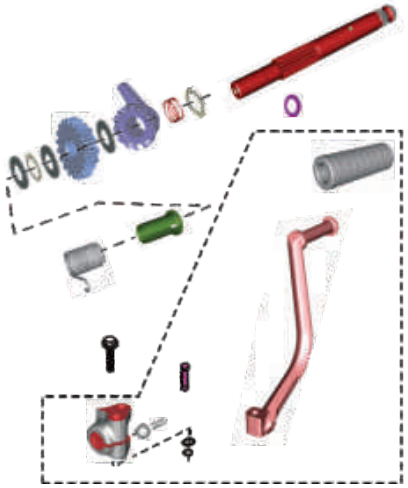

PLATE NO. : 15 COVER CLUTCH	PAGE NO. 29

PLATE NO. : 16 COVER MAGNETO	PAGE NO. 31

PLATE NO. : 17 CLUTCH ASSEMBLY	PAGE NO. 33

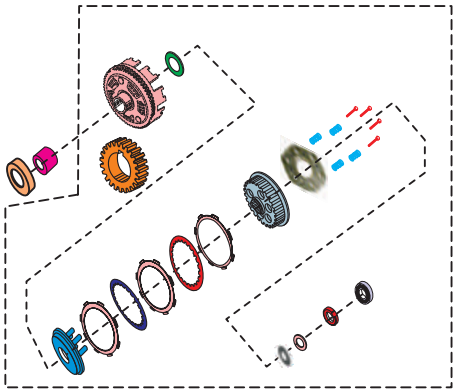

PLATE NO. : 18 STARTER ASSEMBLY	PAGE NO. 35

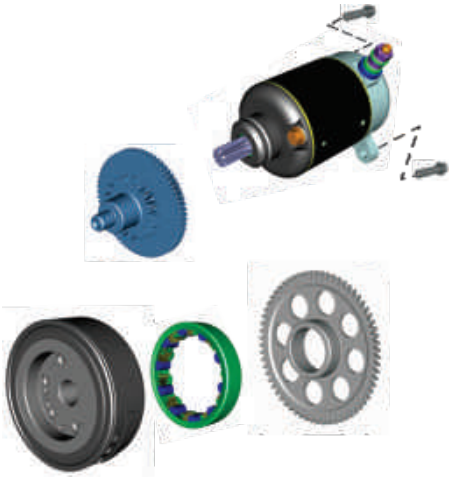

PLATE NO. : 19 MAGNETO, CDI AND H.T. COIL	PAGE NO. 37

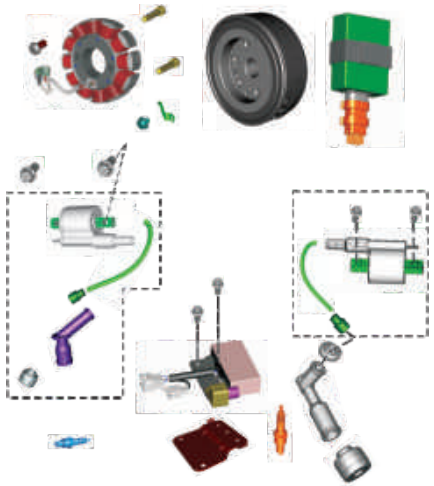

PLATE NO. : 20 CARBURETTOR	PAGE NO. 39

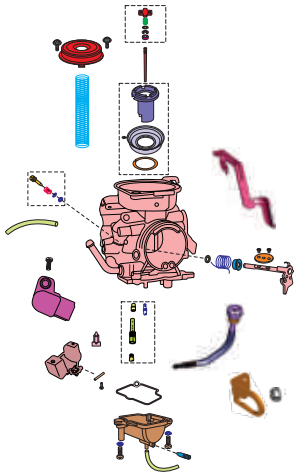

Pictorial Index AS150 | NS150

PLATE NO. : 21 AIR CLEANER COMPLETE	PAGE NO. 41

PLATE NO. : 22 SILENCER ASSEMBLY	PAGE NO. 43

PLATE NO. : 23 ENGINE MOUNTINGS	PAGE NO. 45

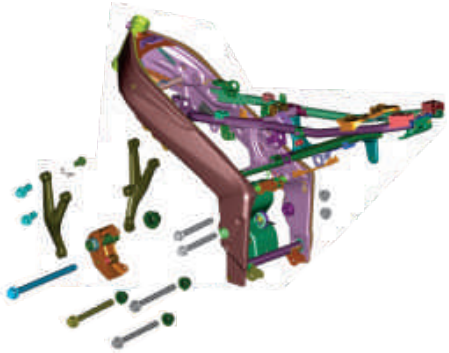

PLATE NO. : 24 SEAT ASSEMBLY / SEAT LOCK	PAGE NO. 47

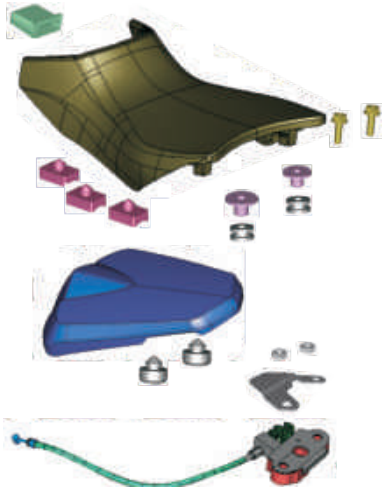

PLATE NO. : 25 FRAME & FRAME FITTINGS	PAGE NO. 49

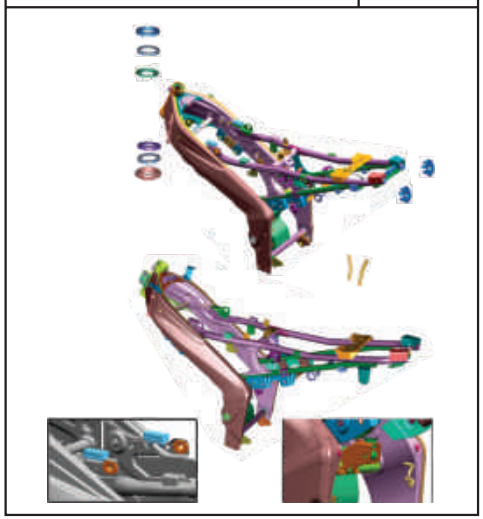

PLATE NO. : 26 SWING ARM/REAR SHOCK ABSORBER	PAGE NO. 51

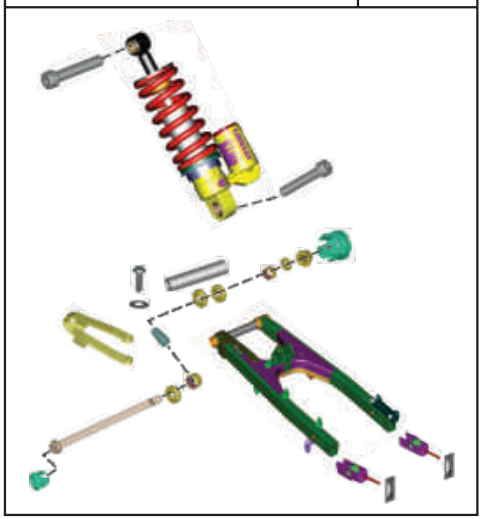

PLATE NO. : 27 PILLION FOOT REST / HOLDER	PAGE NO. 53

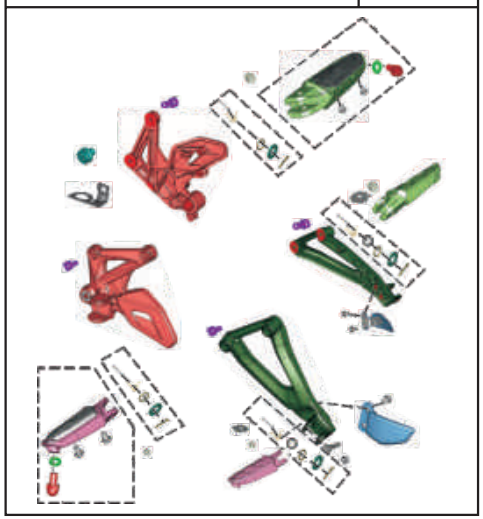

PLATE NO. : 28 MUD GUARD - FRONT & REAR	PAGE NO. 55

Pictorial Index AS150 NS150

PLATE NO. : 29 STAND ASSEMBLY	PAGE NO. 57

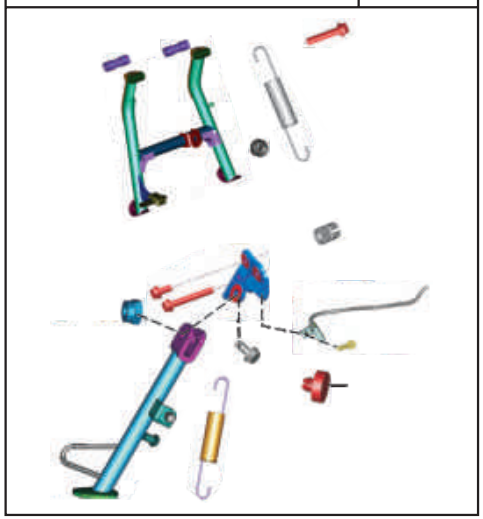

PLATE NO. : 30 TUBE / TYRE / RIM	PAGE NO. 59

PLATE NO. : 31 FRONT HUB	PAGE NO. 61

PLATE NO. : 32 FRONT MASTER CYLINDER	PAGE NO. 63

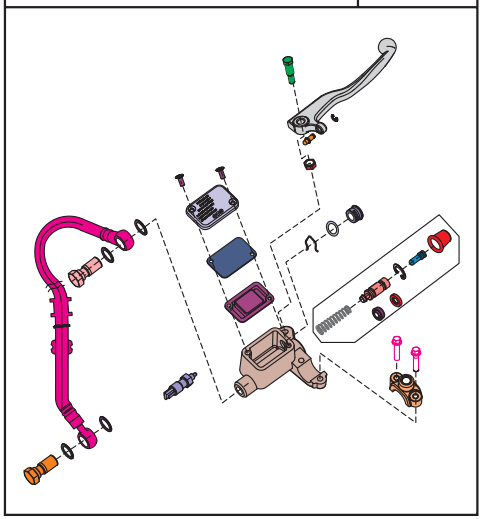

PLATE NO. : 33 FRONT DISC BRAKE	PAGE NO. 65

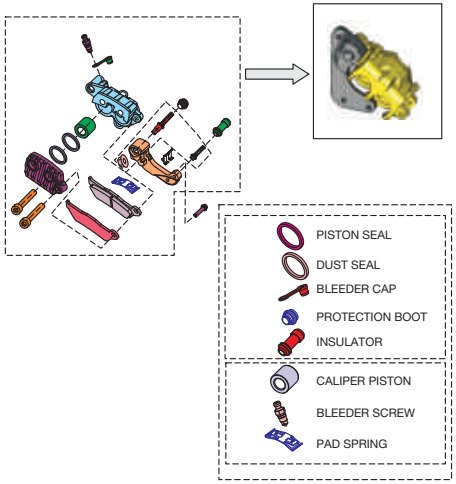

PLATE NO. : 34 REAR HUB	PAGE NO. 67

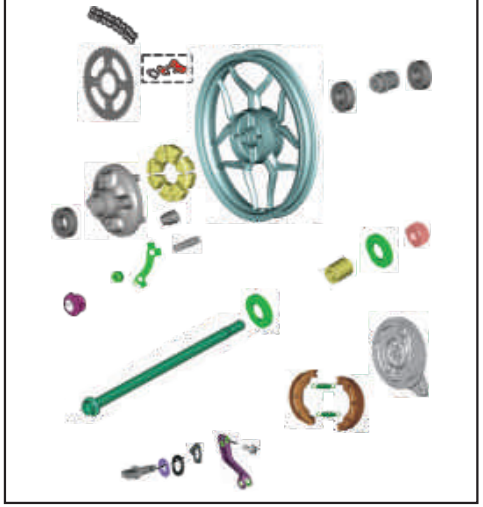

PLATE NO. : 35 REAR DISC PEDAL, BRAKE ROD & TORQUE ROD	PAGE NO. 69

PLATE NO. : 36 HANDLE BAR ASSEMBLY	PAGE NO. 71

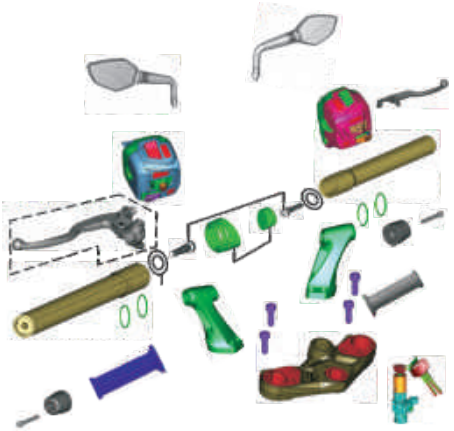

Pictorial Index AS150 NS150

PLATE NO. : 37 FRONT FORK	PAGE NO. 73

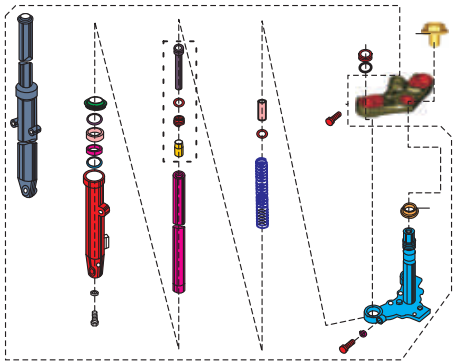

PLATE NO. : 38 SHROUD ASSEMBLY	PAGE NO. 75

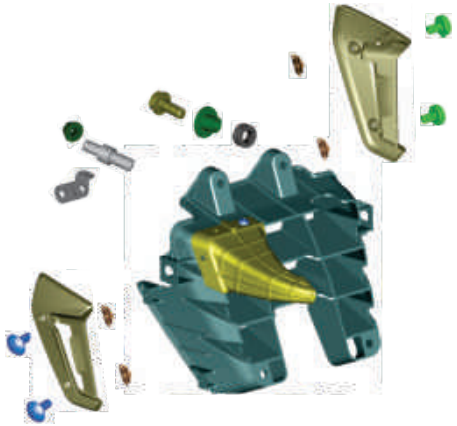

PLATE NO. : 39 PETROL TANK, CAP TANK AND GAUGE FUEL	PAGE NO. 77

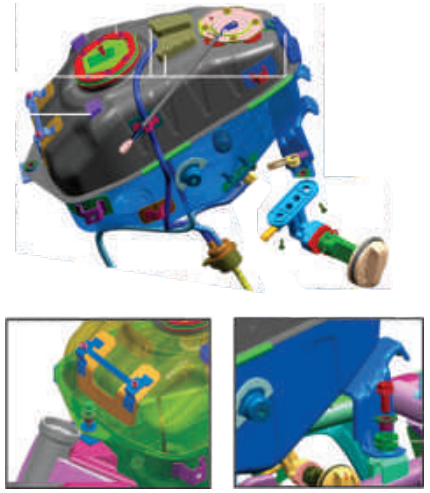

PLATE NO. : 40 FITTINGS - TANK COVER AND FLAP - PULSAR 150 NS	PAGE NO. 79

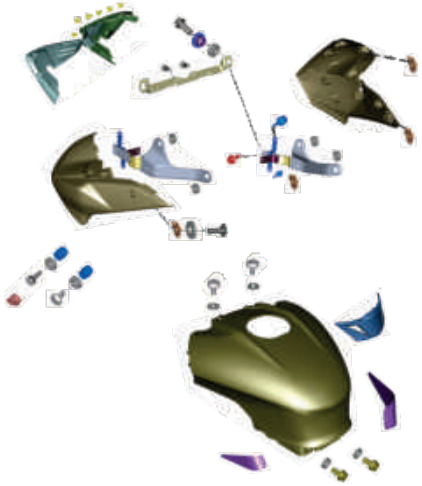

PLATE NO. : 41 FITTINGS - FAIRING & TANK COVER PULSAR AS 150	PAGE NO. 83

PLATE NO. : 42 FITTING SIDE COVERS & SEAT COWL	PAGE NO. 85

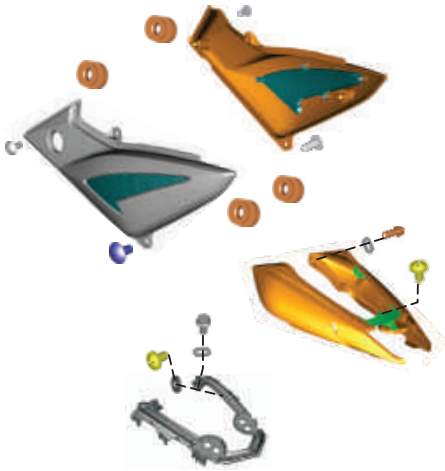

PLATE NO. : 43 METER ASSEMBLY	PAGE NO. 87

PLATE NO. : 44 CONTROL CABLES	PAGE NO. 89

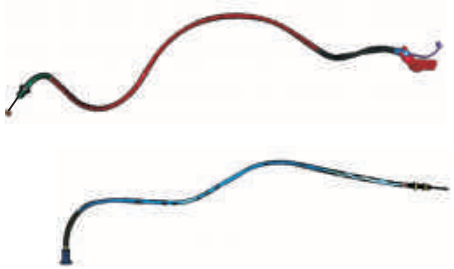

Pictorial Index AS150 NS150

PLATE NO. : 45 CHAIN CASE	PAGE NO. 91

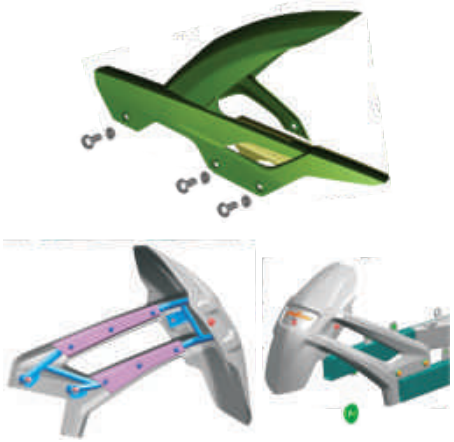

PLATE NO. : 46 HEAD LAMP & FAIRING - PULSAR 150 NS	PAGE NO. 93

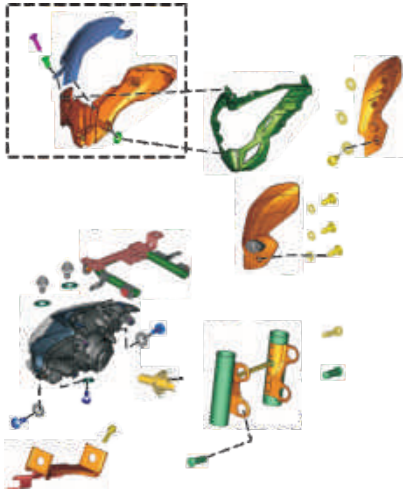

PLATE NO. : 47 HEAD LAMP & FAIRING STRUCTURE PULSAR AS 150	PAGE NO. 95

PLATE NO. : 48 INDICATOR ASSEMBLY	PAGE NO. 97

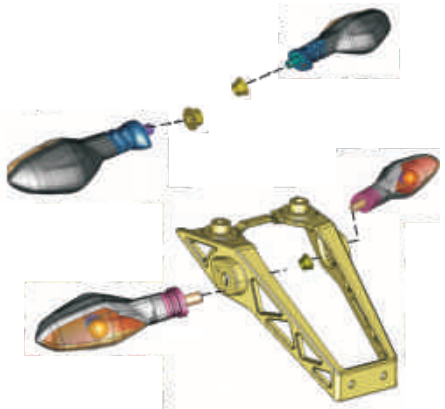

PLATE NO. : 49 NUMBER PLATE / TAIL LAMP ASSLY PULSAR 150 NS	PAGE NO. 99

PLATE NO. : 50 NUMBER PLATE / TAIL LAMP ASSLY PULSAR AS 150	PAGE NO. 101

PLATE NO. : 51 ELECTRICAL EQUIPMENTS	PAGE NO. 103

PLATE NO. : 52 TOOL KIT	PAGE NO. 105

Pictorial Index AS150 NS150

PLATE NO. : 53 ACCESSORIES / GRAB HANDLE	PAGE NO. 107

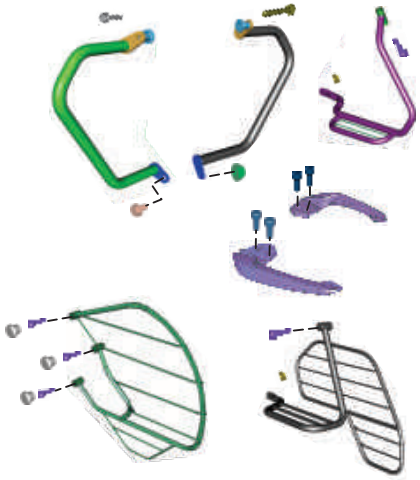

PLATE NO. : 54 PAINTED PARTS AND DECALS PULSAR 150 NS	PAGE NO. 109

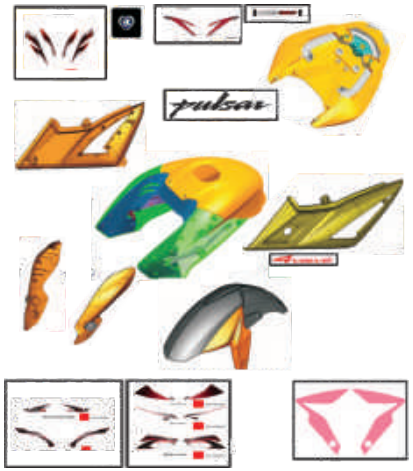

PLATE NO. : 55 PAINTED PARTS AND DECALS PULSAR AS 150	PAGE NO. 111

Plate No.: 1

Brand ID: 001MC626 - NS 150 (JF02)
Brand ID: 001MC685 - AS 150 (JF05)

Cover Cylinder Head

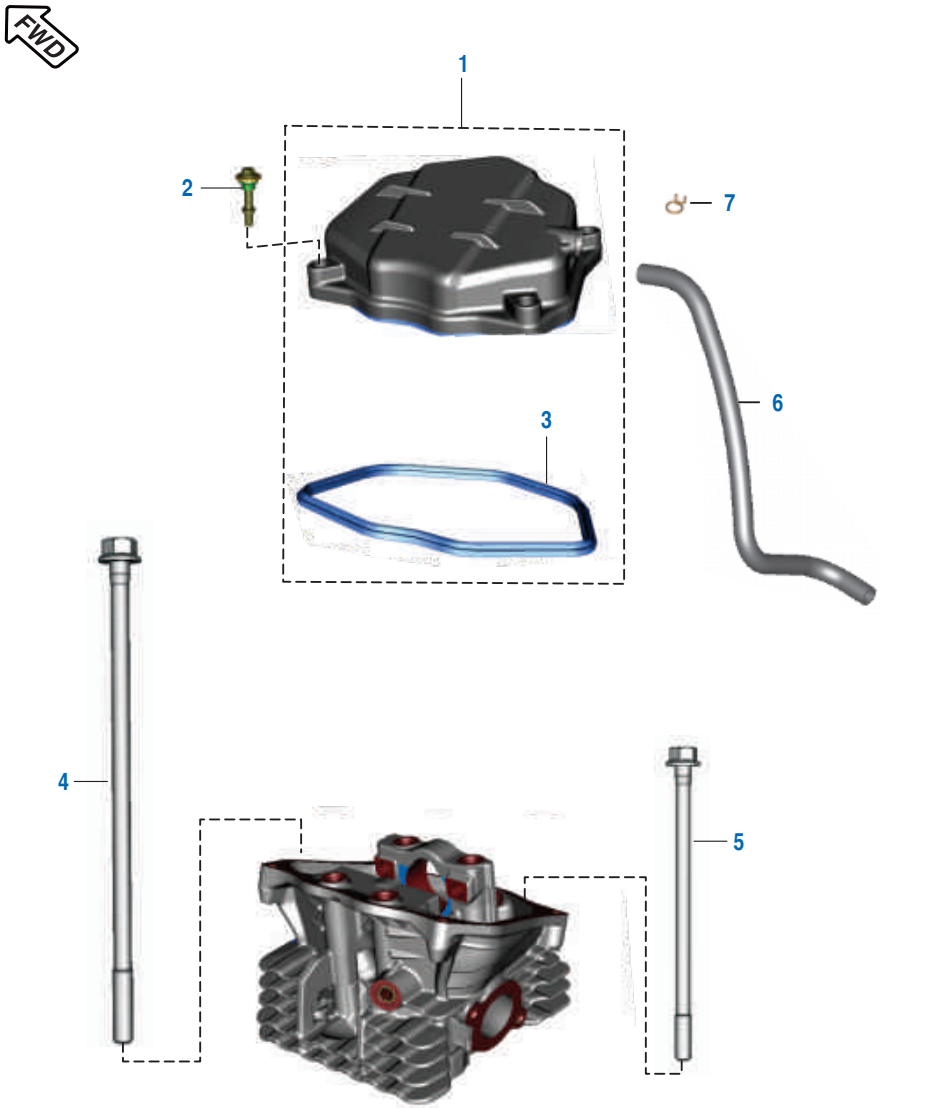

No.	Part No.	Description	Qty. 150 NS	Qty. AS 150	Remarks
1	JE 5110 36	Assly Head Cover	1	1	
2	JE 5110 53	Bolt	4	4	
3	JE 5110 38	Gasket Head Cover	1	1	
4	JE 5110 47	Bolt Head Mounting	4	4	
5	59 0400 50	Flanged Bolt M8X1.25X148L	1	1	
6	JE 5810 11	Tube Breather	1	1	
7	JG 5810 56	Clamp	2	2	

FWD Front Wheel Direction

Brand ID: 001MC626 - NS 150 (JF02)
Brand ID: 001MC685 - AS 150 (JF05)

Plate No.: 2

Cylinder Head

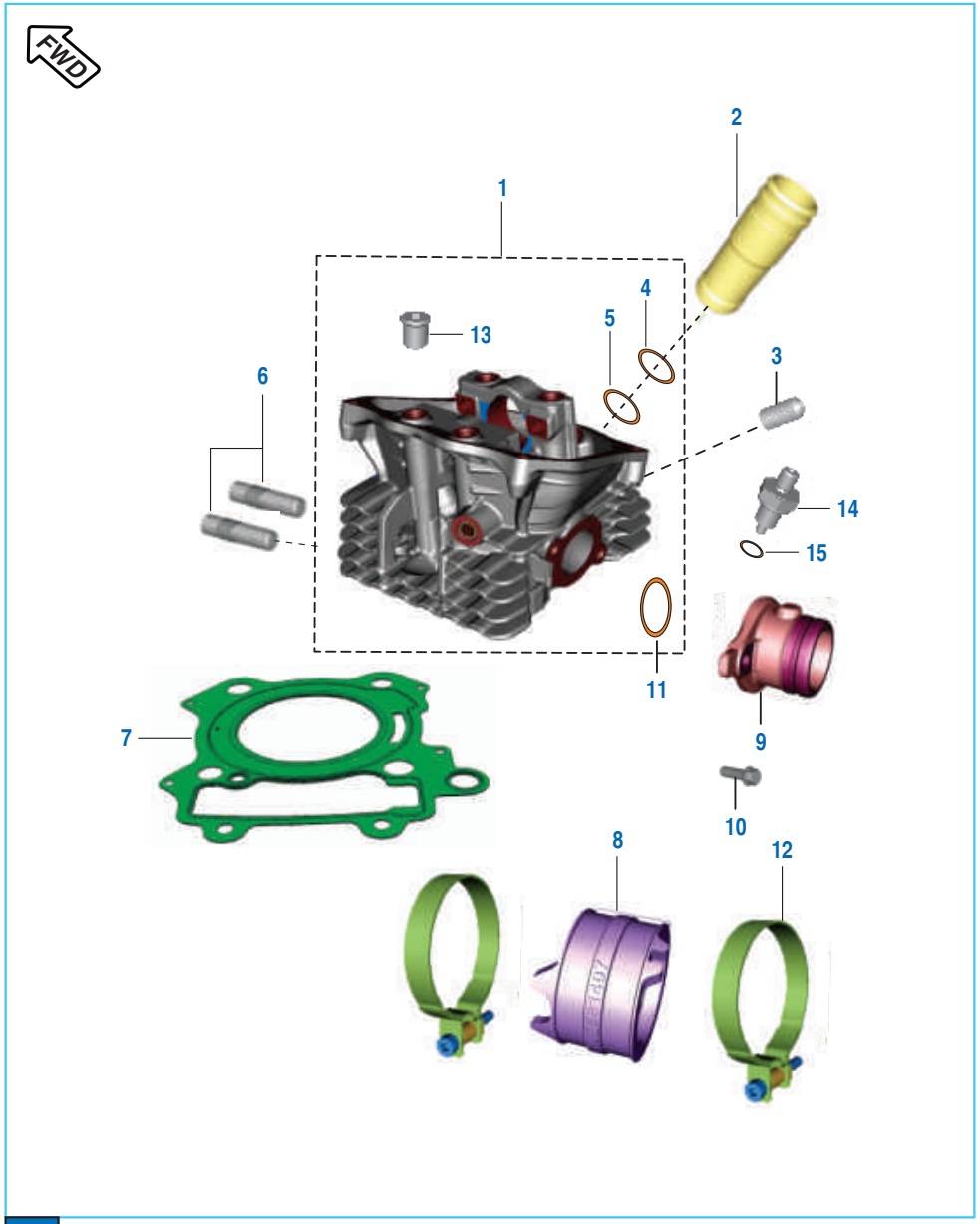

No.	Part No.	Description	Qty. 150 NS	Qty. AS 150	Remarks
1	36 JF00 01	Kit Assly Cylinder Head	1	1	Refer Page No. 115
2	JB 5110 18	Sleeve Spark Plug	1	1	
3	39 2608 01	Screw - Grub - M5X0.8X7	1	1	
4	39 1283 21	Ring - 'O'	3	3	
5	39 2629 21	O-Ring	1	1	
6	39 1660 05	Stud M8X1.25X451	2	2	
7	JZ 5110 16	Gasket Cylinder Head	1	1	
8	JE 5814 07	Sleeve Carburettor	1	1	
9	JE 5814 06	Manifold Intake	1	1	
10	JV 5412 18	Bolt	2	2	
11	LJ A000 10	O-Ring	1	1	
12	DH 1021 18	Clamp Carburettor Duct	2	2	
13	JE 5110 52	Nozzle Head	1	1	
14	DK 1012 25	Oil Pressure Switch	1	1	
15	DK 1013 40	O-Ring	1	1	

FWD Front Wheel Direction

Plate No.: 3

Brand ID: 001MC626 - NS 150 (JF02)
Brand ID: 001MC685 - AS 150 (JF05)

Valve

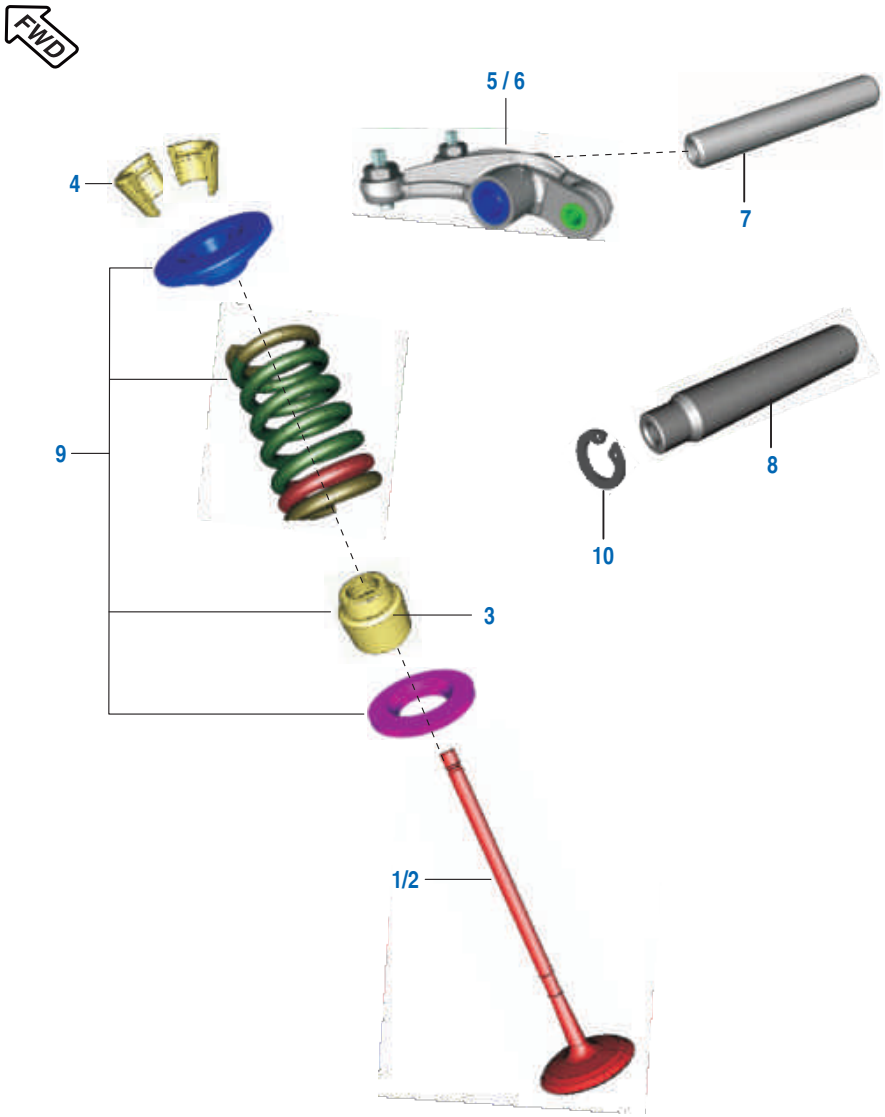

No.	Part No.	Description	Qty. 150 NS	Qty. AS 150	Remarks
1	JE 5112 08	Valve Intake	2	2	
2	JE 5112 09	Valve Exhaust	2	2	
3	39 2017 19	Seal - Oil	4	4	
4	DG 1010 29	Collet	8	8	
5	JE 5112 12	Assly Rocker Arm Intake	1	1	
6	JE 5112 13	Assly Rocker Arm Exhaust	1	1	
7	JE 5112 21	Shaft Rocker Arm Intake	1	1	
8	JE 5112 25	Shaft Rocker Arm Exhaust	1	1	
9	36 JF00 25	Kit Valve Repair	2	2	Refer Page No. 115
10	JE 5110 60	Circlip	1	1	

FWD Front Wheel Direction

Plate No.: 4

Brand ID: 001MC626 - NS 150 (JF02)
Brand ID: 001MC685 - AS 150 (JF05)

Camshaft / Tensioner

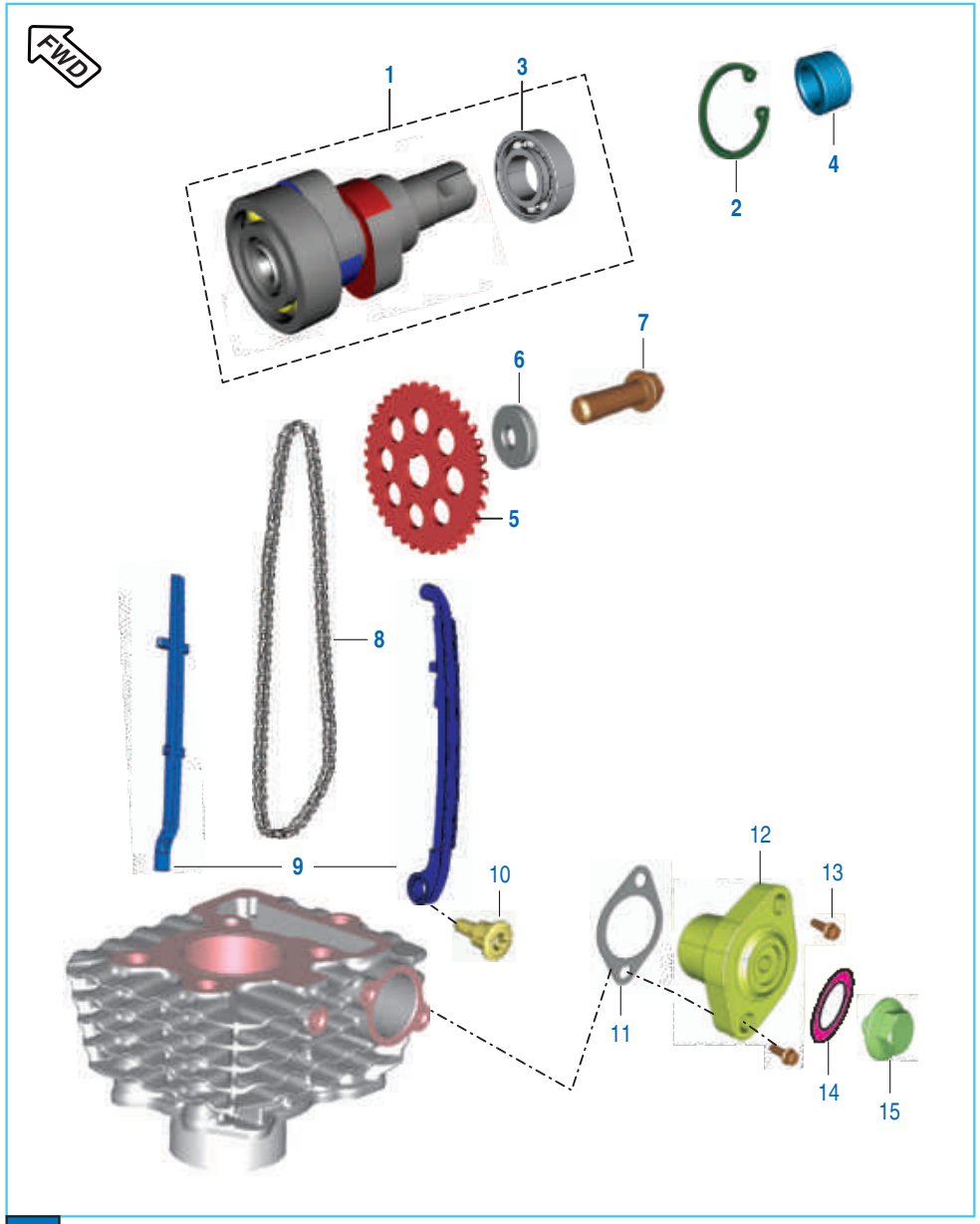

No.	Part No.	Description	Qty. 150 NS	Qty. AS 150	Remarks
1	JE 5112 43	Camshaft Assly	1	1	
2	39 0594 17	Circlip - Internal	1	1	
3	JG 5312 20	Bearing	1	1	
4	JE 5112 41	Spacer Cam Sprocket	1	1	
5	JE 5112 34	Cam Sprocket	1	1	
6	DH 1010 48	Washer- Special: Camshaft	1	1	
7	59 0400 31	Bolt Hex Socket Head Cap	1	1	
8	JE 5112 33	Cam Chain Silent	1	1	
9	36 JF00 05	Kit Chain Guide Silent	1	1	Refer Page No. 115
10	DH 1013 92	Tensioner Pivot Bolt	1	1	
11	CS 1011 28	Gasket	1	1	
12	JE 5210 16	Chain Tensioner	1	1	
13	JV 5412 17	Bolt	2	2	
14	39 2669 21	Ring - 'O' (ID 10.15X1.5)	1	1	
15	JV 5210 06	Bolt Tensioner	1	1	

FWD Front Wheel Direction

Plate No.: 5

Cylinder and Piston

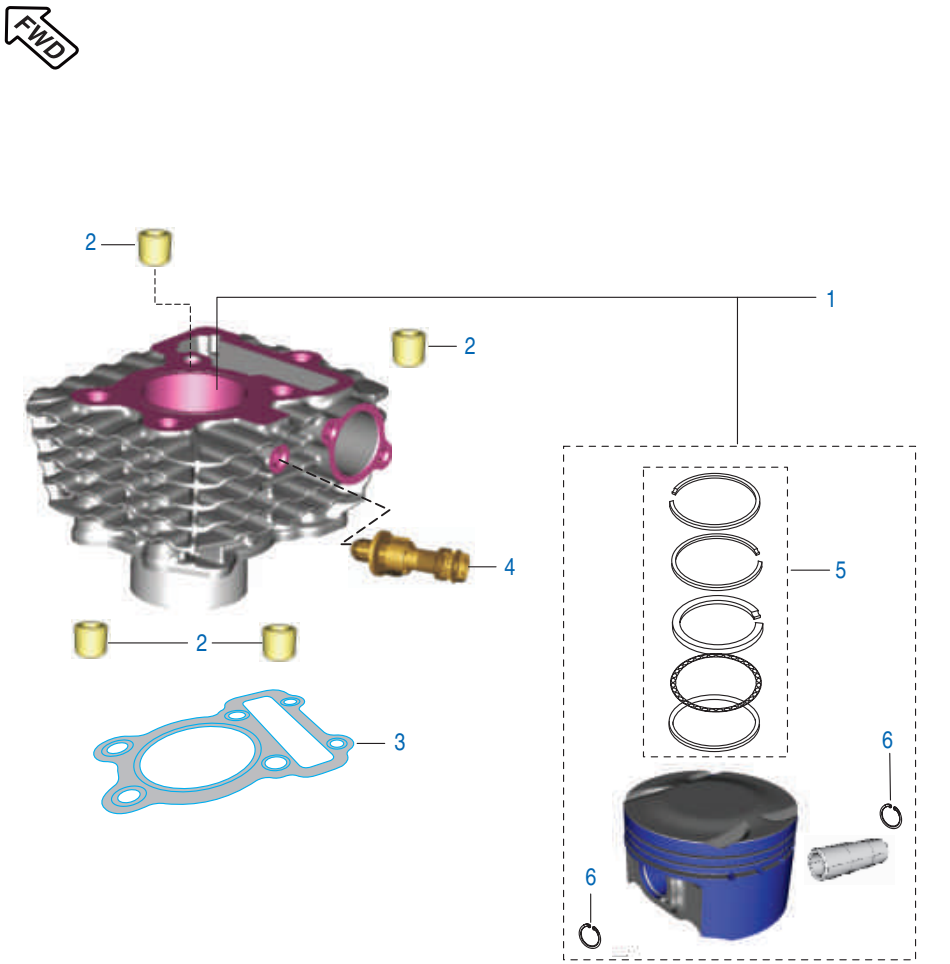

No.	Part No.	Description	Qty. 150 NS	Qty. AS 150	Remarks
1	36 JF00 02	Kit Block Piston	1	1	Refer page no. 115
2	39 1000 06	Pin - Hollow Dowel	4	4	
3	JD 5210 02	Gasket Cylinder Block	1	1	
4	JW 3514 00	Thermal Sensor	1	1	
5	36 JF00 26	Kit Piston Ring	1	1	Refer page no. 115
6	DP 1011 65	Pin Snap	2	2	

FWD Front Wheel Direction

Plate No.: 6

Brand ID: 001MC626 - NS 150 (JF02)
Brand ID: 001MC685 - AS 150 (JF05)

Crankshaft

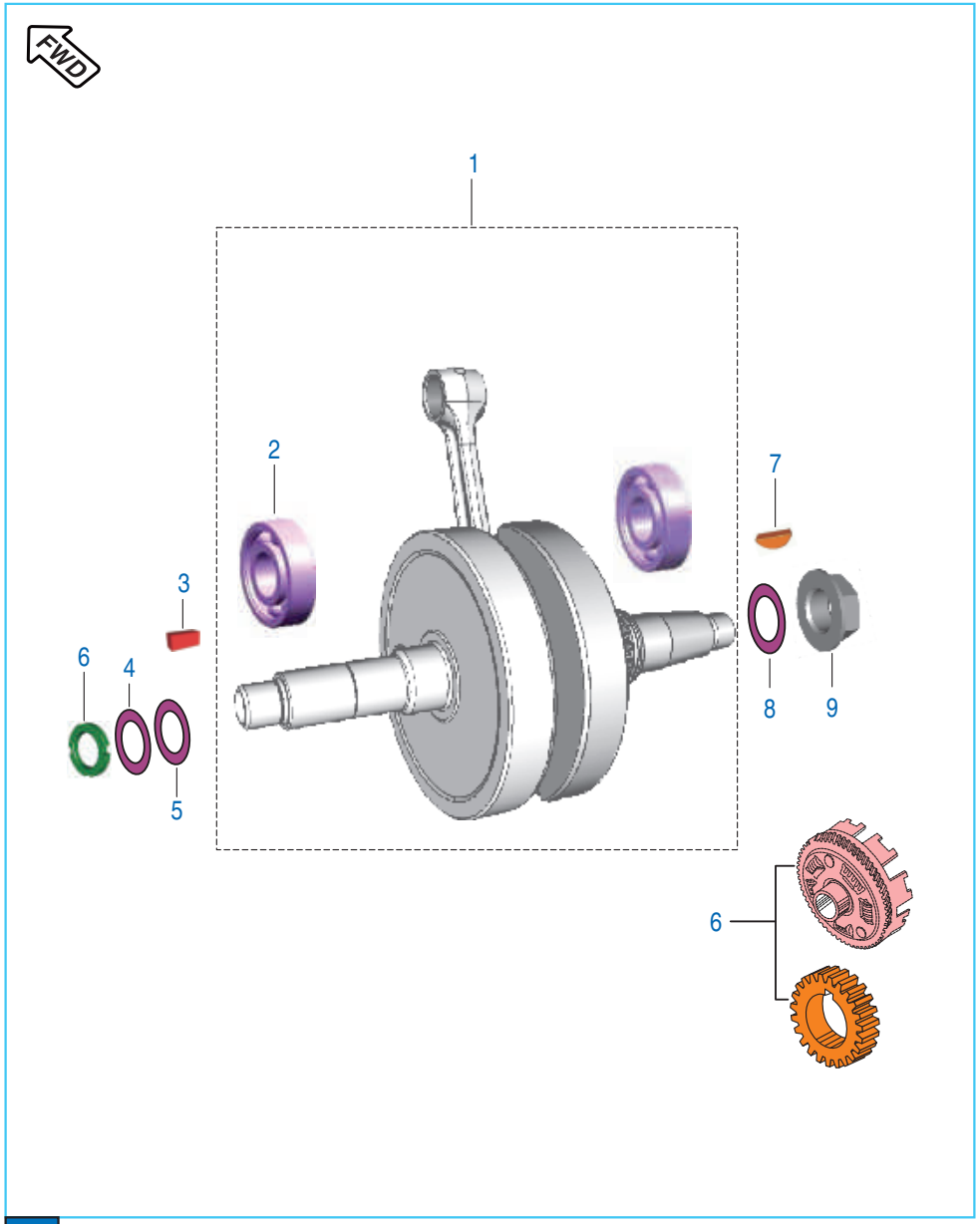

No.	Part No.	Description	Qty. 150 NS	Qty. AS 150	Remarks
1	JE 5310 25	Crankshaft Assembly	1	1	
2	39 2561 20	Bearing Ball	2	2	
3	KF BA04 12	Key	1	1	
4	39 2200 11	Washer Belleville	2	2	
5	59 1100 08	Washer	1	1	
6	DH 1011 95	Nut Clutch Side	1	1	
7	31 1011 73	Key -Woodruff	1	1	
8	59 1200 03	Washer	1	1	
9	59 1500 14	Nut Flange	2	2	
10	36 JZ00 14	Kit Primary Drive & Driven	1	1	Refer Page No.118
11	JE 5512 13	Gear Balancer Drive	1	1	

FWD Front Wheel Direction

Plate No.: 7

Brand ID: 001MC626 - NS 150 (JF02)
Brand ID: 001MC685 - AS 150 (JF05)

Balancer Assly

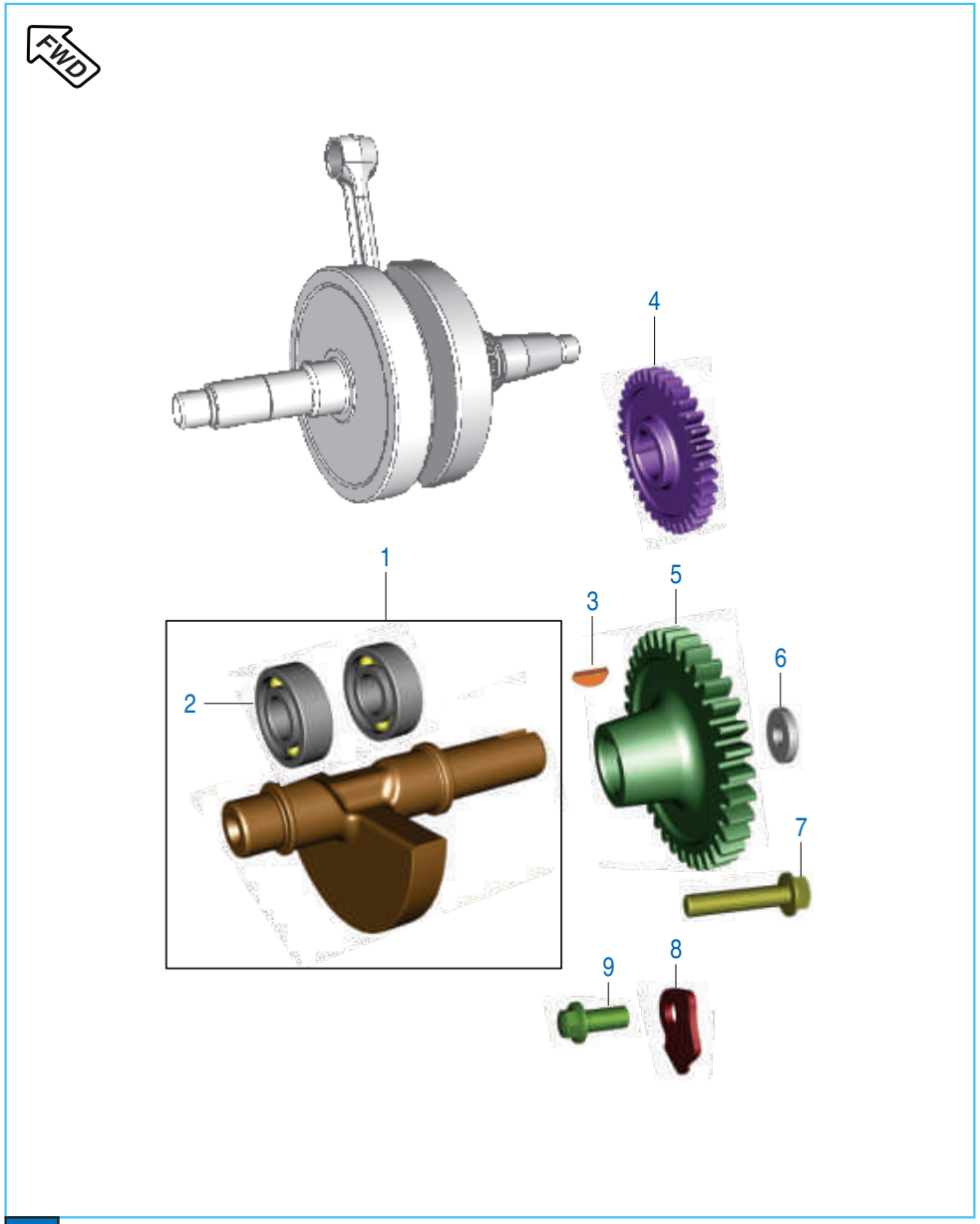

No.	Part No.	Description	Qty. 150 NS	Qty. AS 150	Remarks
1	JE 5312 01	Assembly Balancer	1	1	
2	JG 5312 20	Bearing Ball	2	2	
3	DS 1011 54	Key	1	1	
4	JE 5512 13	Balancer Drive Gear	1	1	
5	JE 5512 14	Balancer Driven Gear	1	1	
6	DH 1010 48	Washer Special	1	1	
7	KA DD08 40	Bolt	1	1	
8	JA 5410 10	Plate	1	1	
9	LA E000 15	Bolt	1	1	

FWD Front Wheel Direction

Plate No.: 8

Brand ID: 001MC626 - NS 150 (JF02)
Brand ID: 001MC685 - AS 150 (JF05)

Transmission

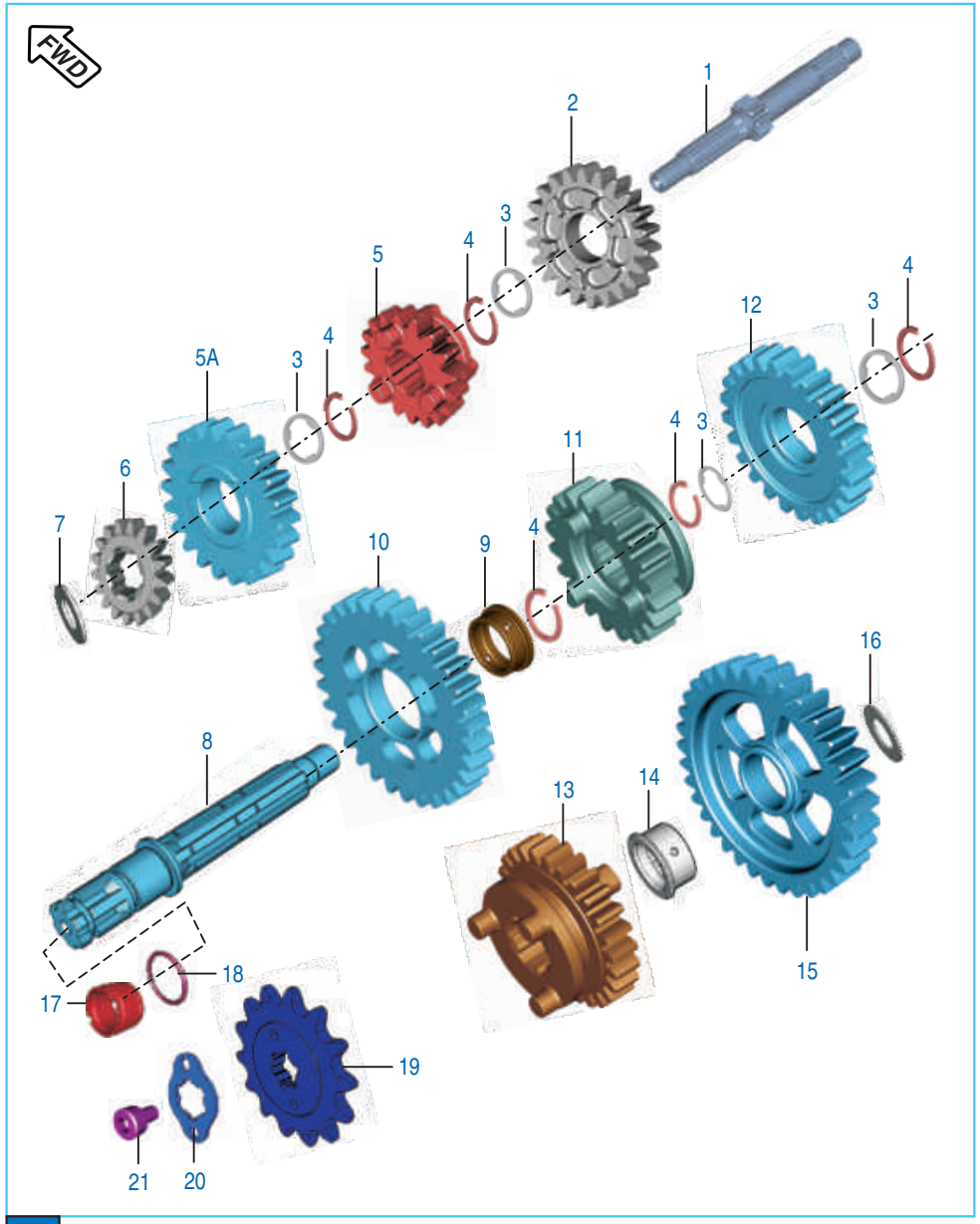

No.	Part No.	Description	Qty. 150 NS	Qty. AS 150	Remarks
1	JE 5510 01	Shaft Input	1	1	
2	JE 5512 02	Gear 4th Drive	1	1	
3	JA 5510 02	Spline Washer	4	4	
4	39 0987 17	Ring - Snap	5	5	
5	JE 5512 01	Gear 3rd Drive	1	1	
5A	JE 5512 03	Gear 5th Drive	1	1	
6	JE 5512 00	Gear 2nd Drive	1	1	
7	JA 5510 04	Washer Thrust 2nd Drive	1	1	
8	JE 5510 07	Shaft Output	1	1	
9	JZ 5512 10	Bush Gear 2nd Driven	1	1	
10	JE 5512 05	Gear 2nd Driven	1	1	
11	JE 5512 08	Gear 5th Driven	1	1	
12	JE 5512 06	Gear 3rd Driven	1	1	
13	JE 5512 16	Gear 4th Driven	1	1	
14	JE 5512 12	Bush 1st Driven	1	1	
15	JE 5512 15	Gear 1st Driven	1	1	
16	JE 5512 11	Washer Thrust	1	1	
17	JA 5510 09	Collar Sprocket Drive	1	1	
18	59 2100 24	'O' Ring	1	1	
19	JV 5510 00	Sprocket Output (15T)	1	1	
20	DU 1012 13	Plate Lock-sprocket output	1	1	
21	LA C000 69	Bolt Flanged	2	2	

FWD Front Wheel Direction

Plate No.: 9

Brand ID: 001MC626 - NS 150 (JF02)
Brand ID: 001MC685 - AS 150 (JF05)

Change Drum / Shift Fork

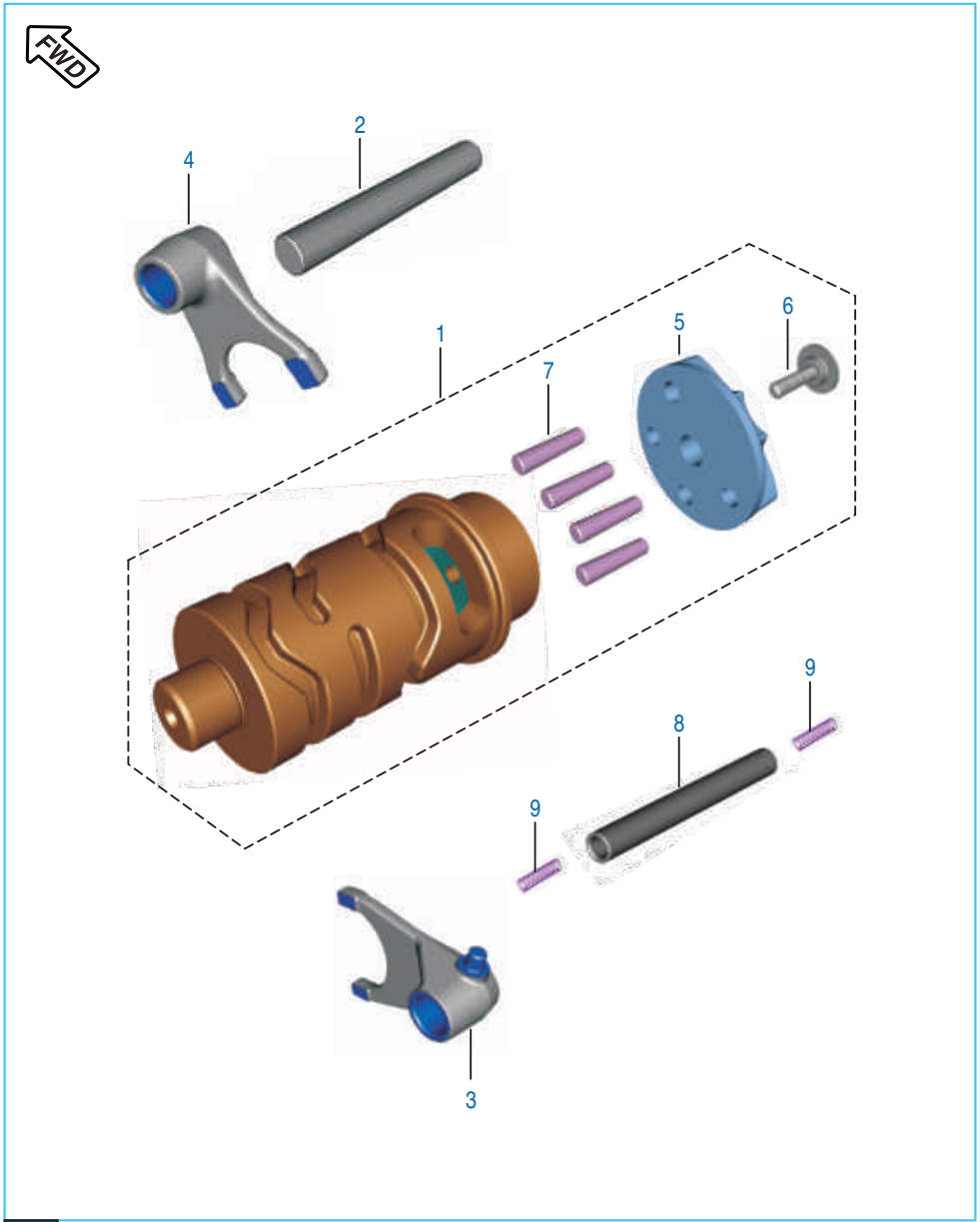

No.	Part No.	Description	Qty. 150 NS	Qty. AS 150	Remarks
1	JE 5610 03	Drum Gear Shift	1	1	
2	JD 5610 06	Shaft Gear Fork Shift Input	1	1	
3	JD 5610 04	Fork Gear Shift Output	2	2	
4	JZ 5610 02	Fork Input Disco-H	1	1	
5	JD 5610 02	Cam Drum Change	1	1	
6	JD 5610 11	Special bolt	1	1	
7	39 0992 06	Dowl	4	4	
8	JE 5610 04	Shaft Output	1	1	
9	JY 5410 39	Spring	2	2	

FWD Front Wheel Direction

Plate No.: 10

Brand ID: 001MC626 - NS 150 (JF02)
Brand ID: 001MC685 - AS 150 (JF05)

Gear Change Mechanism

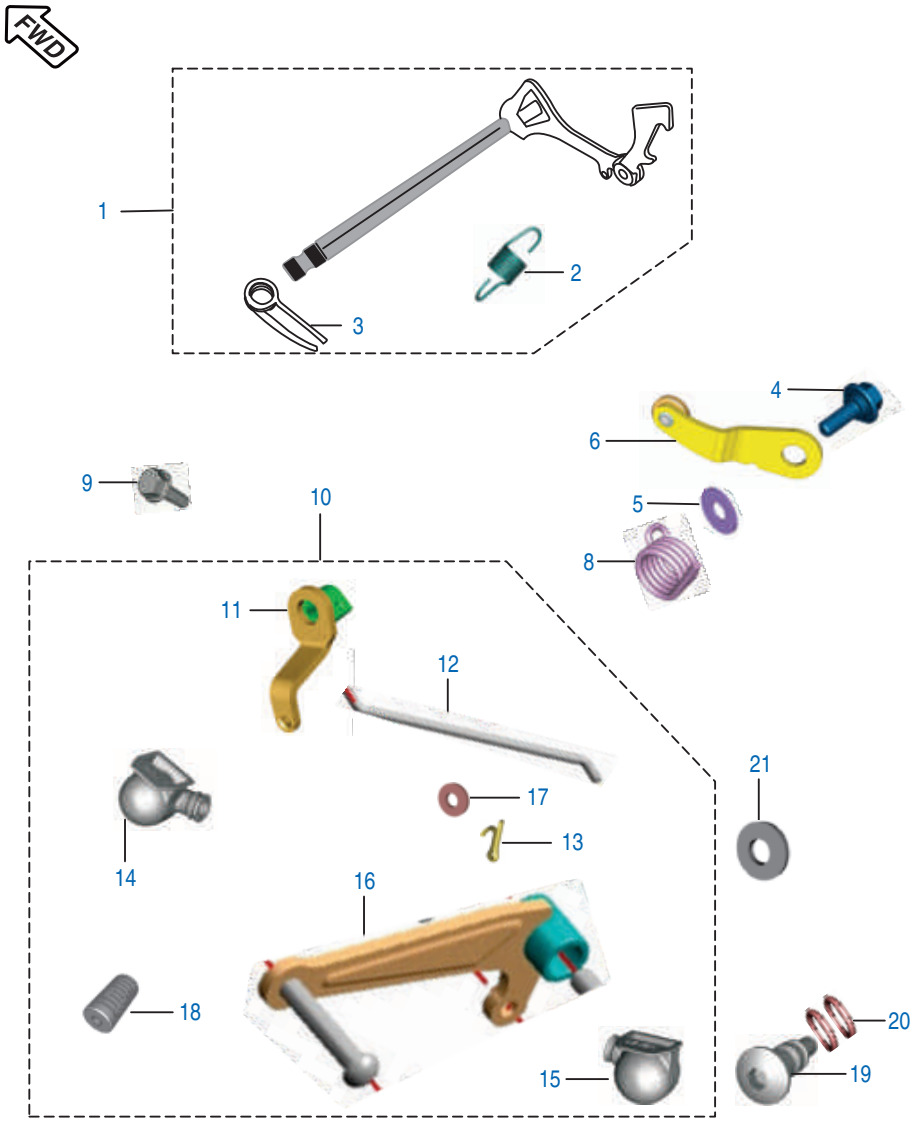

No.	Part No.	Description	Qty. 150 NS	Qty. AS 150	Remarks
1	52 JZ02 64	Lever Comp Gear Shift	1	1	
2	JW 5612 06	Extension Spring	1	1	
3	JE 5612 00	Spring Gear Shift Return	1	1	
4	BF 5612 19	Bolt Detent Lever	1	1	
5	LD B000 44	Washer (Spring Steel)	1	1	
6	PA 5612 09	Inhibitor Comp. Gear Shift	1	1	
8	JD 5612 04	Spring (Inhibitor)	1	1	
9	39 2453 04	Bolt - Flange : M6	1	1	
10	JF 5614 12	Lever Assly Gear Shift Comp	1	1	
11	JF 5614 03	Lever Change Arm Complete	1	1	
12	JF 5614 18	Rod Tie	1	1	
13	39 0808 08	Pin Snap	2	2	
14	JF 5614 04	Boot Change Arm	1	1	
15	JF 5614 05	Boot Change Lever	1	1	
16	JF 5614 14	Assly Lever Compl Change	1	1	
17	JD 5614 16	Washer Nylon	2	2	
18	DH 1015 09	Damper	1	1	
19	JL 5614 09	Bolt Gear Change Lever	1	1	
20	01 1009 05	‘O’ Ring	2	2	
21	JL 5614 10	Washer Steel	1	1	

FWD Front Wheel Direction

Plate No.: 11

Brand ID: 001MC626 - NS 150 (JF02)
Brand ID: 001MC685 - AS 150 (JF05)

Engine Assembly / Crankcase RH

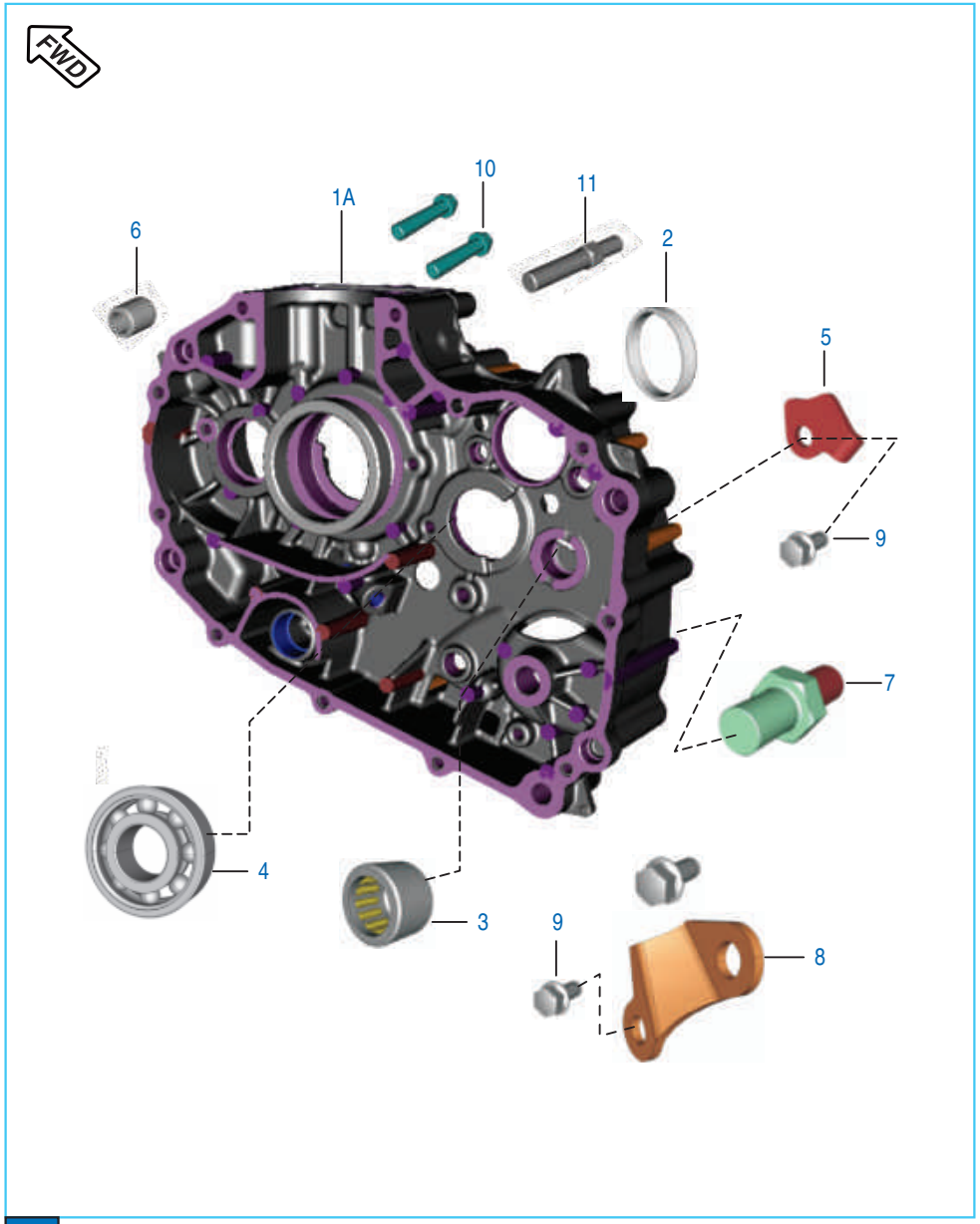

No.	Part No.	Description	Qty. 150 NS	Qty. AS 150	Remarks
1	JE 5010 10	Engine Assly	1	1	
1A	36 JF00 29	Kit Assly C'Case RH	1	1	Ref. Page No. 116
2	PF 5410 18	Bushing Drum	1	1	
3	39 2562 20	Needle Roller Bearing	1	1	
4	59 2000 36	Bearing - Ball 6203 HN3 C3	1	1	
5	JA 5410 10	Stopper plate input bearing	1	1	
6	BA 1321 22	Dowl Pin	2	2	
7	JA 5410 14	Bolt Shift Change	1	1	
8	JA 5410 12	Guide Kick	1	1	
9	LA E000 15	Bolt Flange	4	4	
10	LA E000 25	Bolt	2	2	
11	JE 5410 28	Pin	1	1	

FWD Front Wheel Direction

Plate No.: 12

Brand ID: 001MC626 - NS 150 (JF02)
Brand ID: 001MC685 - AS 150 (JF05)

Crankcase LH

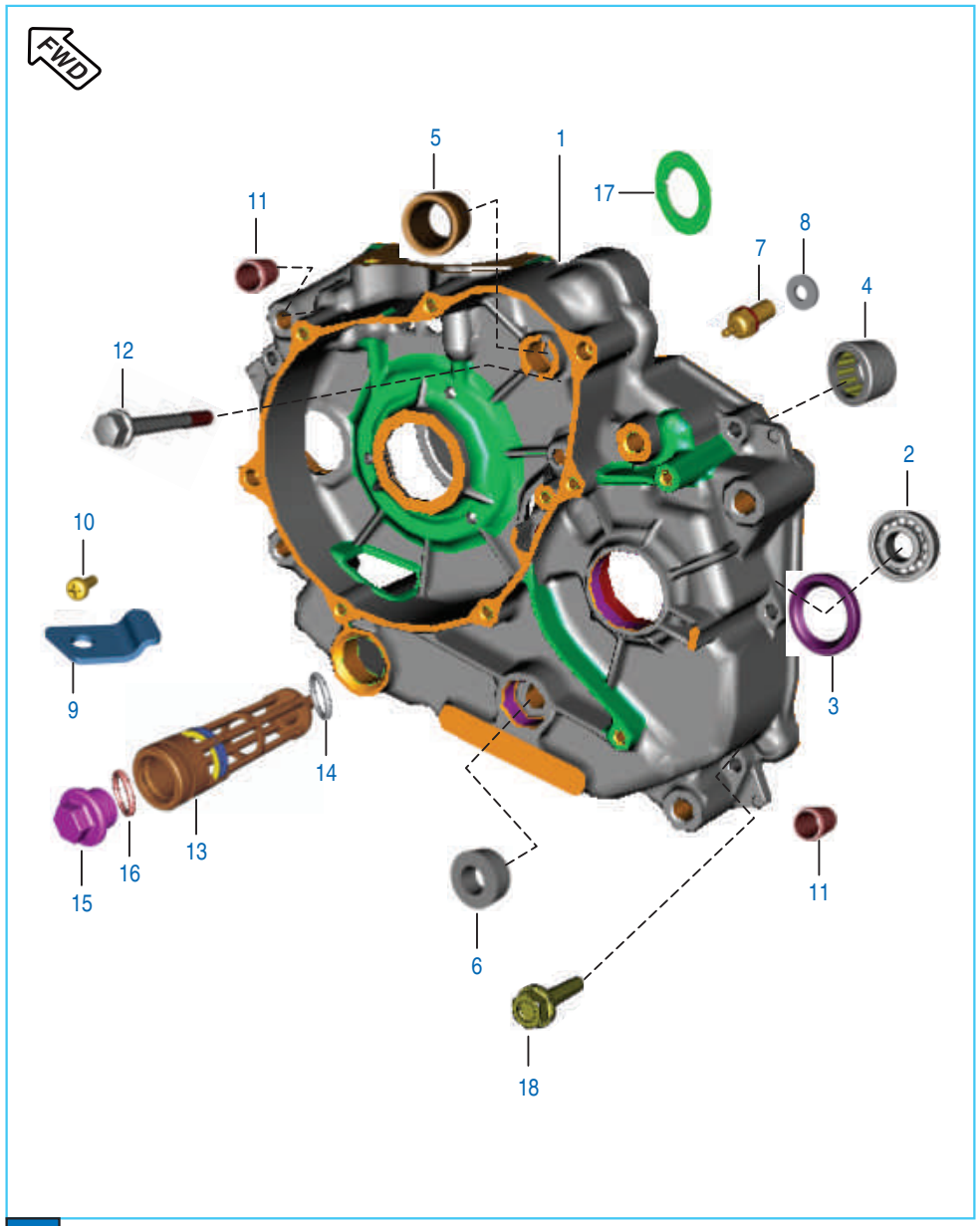

No.	Part No.	Description	Qty. 150 NS	Qty. AS 150	Remarks
1	36 JF00 27	Assly C' Case LH	1	1	Refer Page No. 116
2	59 2000 36	Ball Bearing	1	1	
3	39 1715 19	Seal - Oil	1	1	
4	39 2562 20	Bearing - Needle Roller	1	1	
5	JA 5410 05	Bush Bendix	1	1	
6	39 2190 19	Seal - Oil	1	1	
7	31 2010 81	Switch - Neutral	1	1	
8	DH 1012 64	Neutral Switch AL Washer	1	1	
9	JE 6214 05	Stopper Gear Starter-	1	1	
10	DH 1013 80	Screw Pan Head- M6	1	1	
11	39 0999 06	Pin - Hollow Dowel	2	2	
12	LA E000 24	Bolt - M6 X 55	1	1	
13	JG 5710 24	Mesh Oil Filter Assy_G2	1	1	With 'O' ring
14	LJ A000 04	'O' ring-Strainer	1	1	
15	JA 5410 21	Cap Strainer	1	1	
16	59 2100 23	'O' ring Cap Strainer	1	1	
17	JE 5410 48	Damper	1	1	
18	JV 5410 07	Bolt Flange	6	6	

FWD Front Wheel Direction

Plate No.: 13

Brand ID: 001MC626 - NS 150 (JF02)
Brand ID: 001MC685 - AS 150 (JF05)

Oil Pump

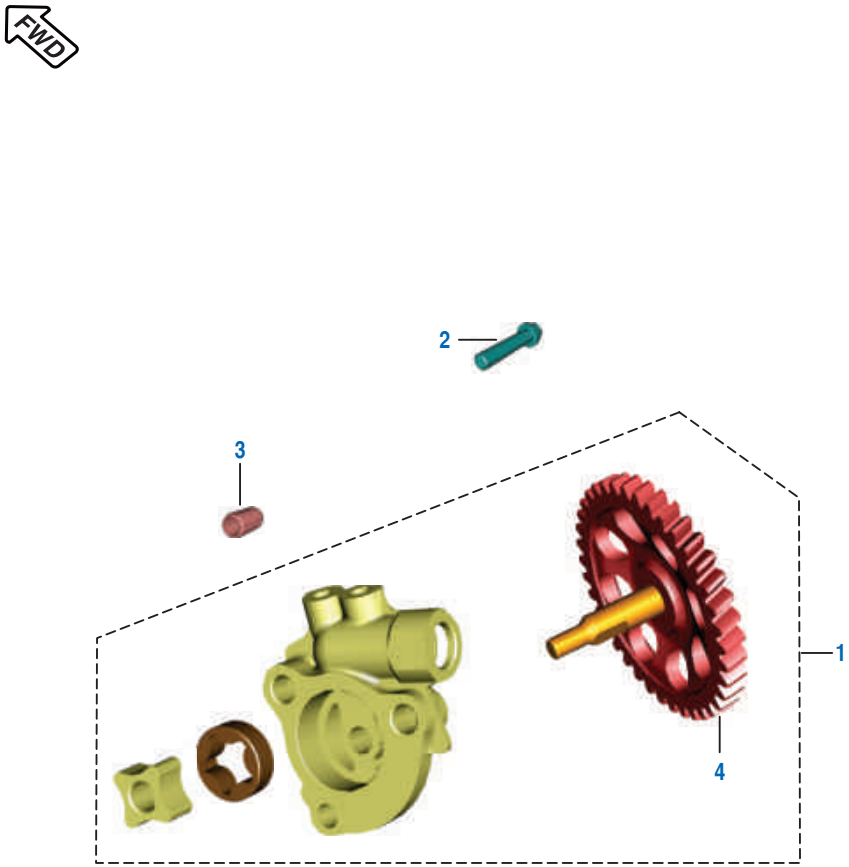

No.	Part No.	Description	Qty. 150 NS	Qty. AS 150	Remarks
1	JE 5710 03	Assembly Oil Pump	1	1	
2	FD 1010 78	Screw Pan Cross :	3	3	Pre-Coated
3	39 0999 06	Pin Dowel	2	2	
4	JE 5710 04	Gear Oil Pump Driven	1	1	

FWD Front Wheel Direction

Plate No.: 14

Brand ID: 001MC626 - NS 150 (JF02)
Brand ID: 001MC685 - AS 150 (JF05)

Kick Starter Mechanism

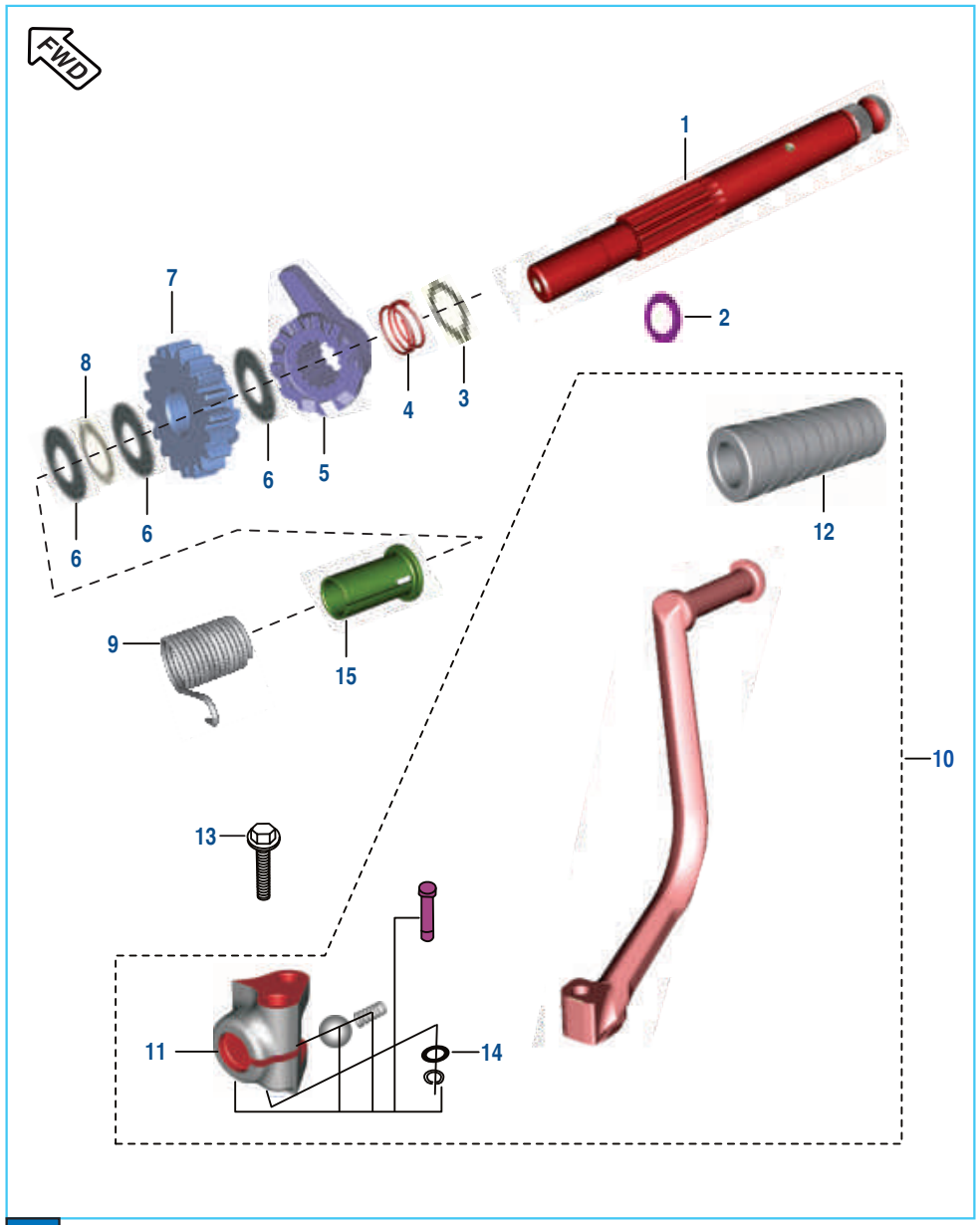

No.	Part No.	Description	Qty. 150 NS	Qty. AS 150	Remarks
1	JE 6210 02	Kick Shaft	1	1	
2	JA 6210 06	Washer Thrust	1	1	
3	39 0738 17	Circlip	1	1	
4	DS 1011 17	Spring Kick Starter Ratchet	1	1	
5	JA 6210 02	Ratchet	1	1	
6	39 0993 11	Washer Plain	3	3	
7	JZ 6210 00	Assly Gear Starter Pinion	1	1	
8	39 2408 17	External Circlip	1	1	
9	JE 6210 03	Spring Kick Return	1	1	
10	JE 6212 03	Assembly Kick Lever	1	1	
11	36 JF00 07	Kit Boss Kick Lever	1	1	Refer Page No.115
12	DD 1010 97	Damper	1	1	
13	JA 6212 06	Bolt	1	1	
14	22 1502 41	Plain Washer	1	1	
15	JE 6210 04	Sleeve	1	1	

FWD Front Wheel Direction

Plate No.: 15

Brand ID: 001MC626 - NS 150 (JF02)
Brand ID: 001MC685 - AS 150 (JF05)

Cover Clutch

No.	Part No.	Description	Qty. 150 NS	Qty. AS 150	Remarks
1	36 JF00 04	Kit Assly Clutch Cover	1	1	Refer Page No. 115
2	JV 5412 08	Shaft Clutch Release Assly	1	1	
3	JE 5412 44	Bracket Clutch Cable	1	1	
4	JV 5410 07	Bolt - Flange	10	10	
5	JV 5412 17	Bolt	3	3	
6	JE 5412 67	Decal Clutch Cover	1	1	
6A	39 1671 21	Ring - 'O'	1	1	
7	JE 5412 34	Cap Filter	1	1	
8	JE 5710 07	Element Oil Filter	1	1	
9	JE 5514 08	Rod-Push	1	1	
10	39 1041 19	Seal - Oil	1	1	
11	DH 1021 17	Clip - Wire	1	1	
12	JL 5412 27	Gauge	1	1	
13	JA 5412 25	O Ring Cap Oil Filler	1	1	
14	JA 5412 11	Cap Oil Filler	1	1	
15	JE 5412 41	Gasket Clutch Cover	1	1	
16	JE 5412 13	Plain Washer (12.5X24X0.8)	1	1	
17	JE 5412 14	Spring Torsion Cl. Cover	1	1	
18	30 1011 42	Seal - Oil (Kick Shaft)	1	1	
19	JE 5412 49	Position Plate	1	1	
20	DH 1013 83	Bolt-Position Plate	1	1	
21	JE 5412 42	Seal Oil Crankshaft	1	1	
22	39 1561 21	O-Ring-Push Rod	1	1	

FWD Front Wheel Direction

Plate No.: 16

Brand ID: 001MC626 - NS 150 (JF02)
Brand ID: 001MC685 - AS 150 (JF05)

Cover Magneto

No.	Part No.	Description	Qty. 150 NS	Qty. AS 150	Remarks
1	36 JF00 03	Assly Cover Magneto	1	1	Refer Page No. 115
2	JV 5412 07	Cap TDC finder	1	1	
3	30 1011 95	'O' ring	1	1	
4	JV 5410 07	Bolt - Flanged : Small	7	7	
5	JL 5412 23	Label Mag Cover	1	1	
6	39 0999 06	Dowl	2	2	
7	JA 5410 05	Bush Bendix	1	1	
8	JE 5412 40	Gasket Magneto Cover	1	1	
9	JE 5412 28	Cover RR assly	1	1	With Gear Shift Label
10	JV 5410 07	Flange bolt	2	2	
11	DJ 1612 28	Gear Shift Label	1	1	

FWD Front Wheel Direction

Plate No.: 17

Brand ID: 001MC626 - NS 150 (JF02)
Brand ID: 001MC685 - AS 150 (JF05)

Clutch Assly

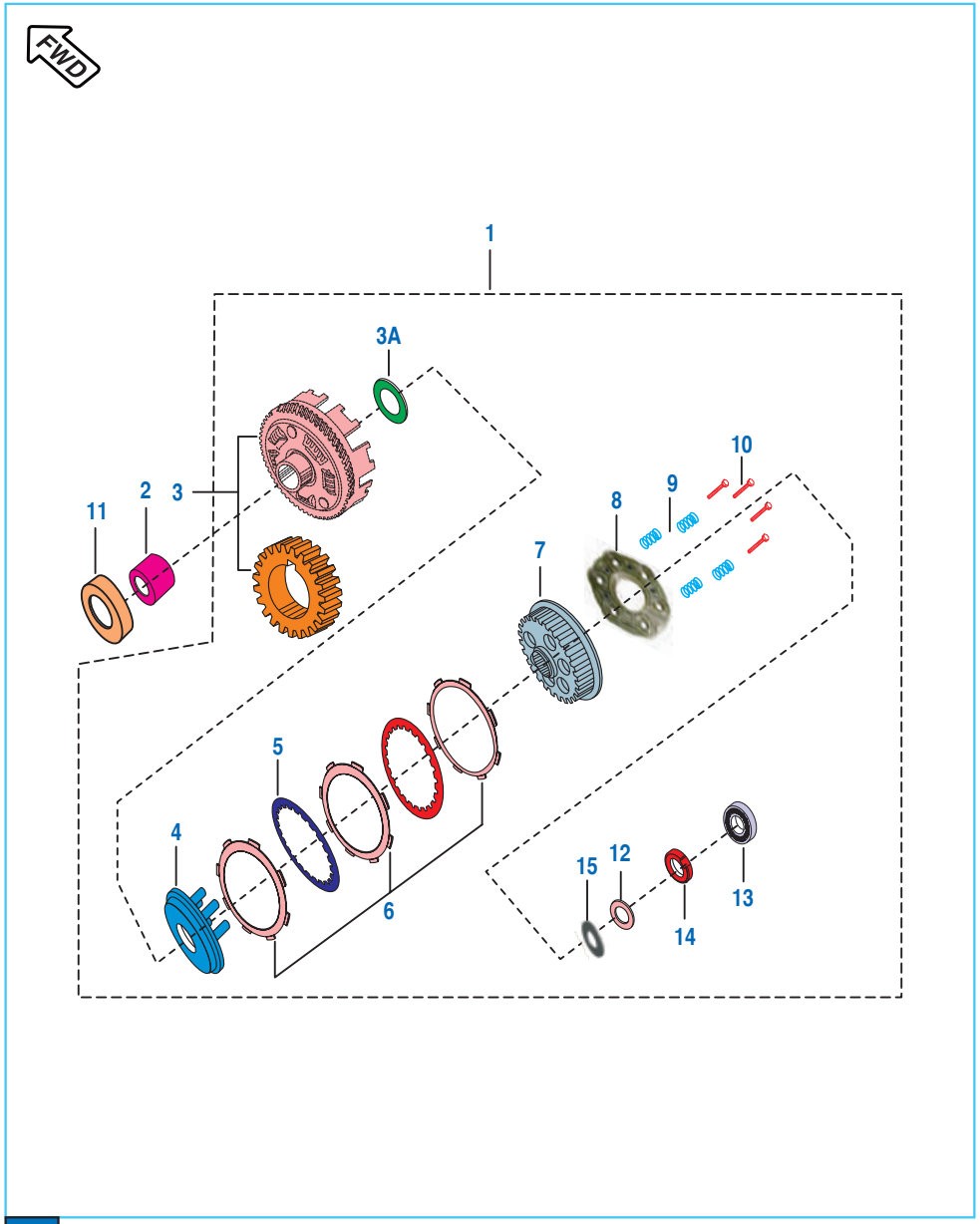

No.	Part No.	Description	Qty. 150 NS	Qty. AS 150	Remarks
1	JE 5514 11	Assembly Clutch	1	1	
2	JA 5514 06	Collar Clutch	1	1	
3	36 JZ00 14	Kit Primary Drive & Driven	1	1	Refer Page No.118
3A	JG 5514 28	Washer - Plain	1	1	
4	JE 5514 14	Plate Clutch Pressure	1	1	
5	JG 5514 47	Plate Cutch	4	4	
6	36 JZ01 21	Kit Friction Plate	1	1	Refer Page No. 118
7	JE 5514 13	Clutch Center	1	1	
8	JE 5514 15	Plate Clutch Lifter	1	1	
9	JZ 5514 12	Compression Spring	4	4	
10	DP 1011 16	Bolt Upset	4	4	
11	JD 5514 00	Spacer Clutch Assembly	1	1	
12	39 2200 11	Washer Plain	1	1	
13	14 1510 33	Bearing - Ball	1	1	
14	DH 1016 48	Nut Crankshaft M14	1	1	
15	39 0240 11	Washer Plain	1	1	

FWD Front Wheel Direction

Plate No.: 18

Brand ID: 001MC626 - NS 150 (JF02)
Brand ID: 001MC685 - AS 150 (JF05)

Starter Assembly

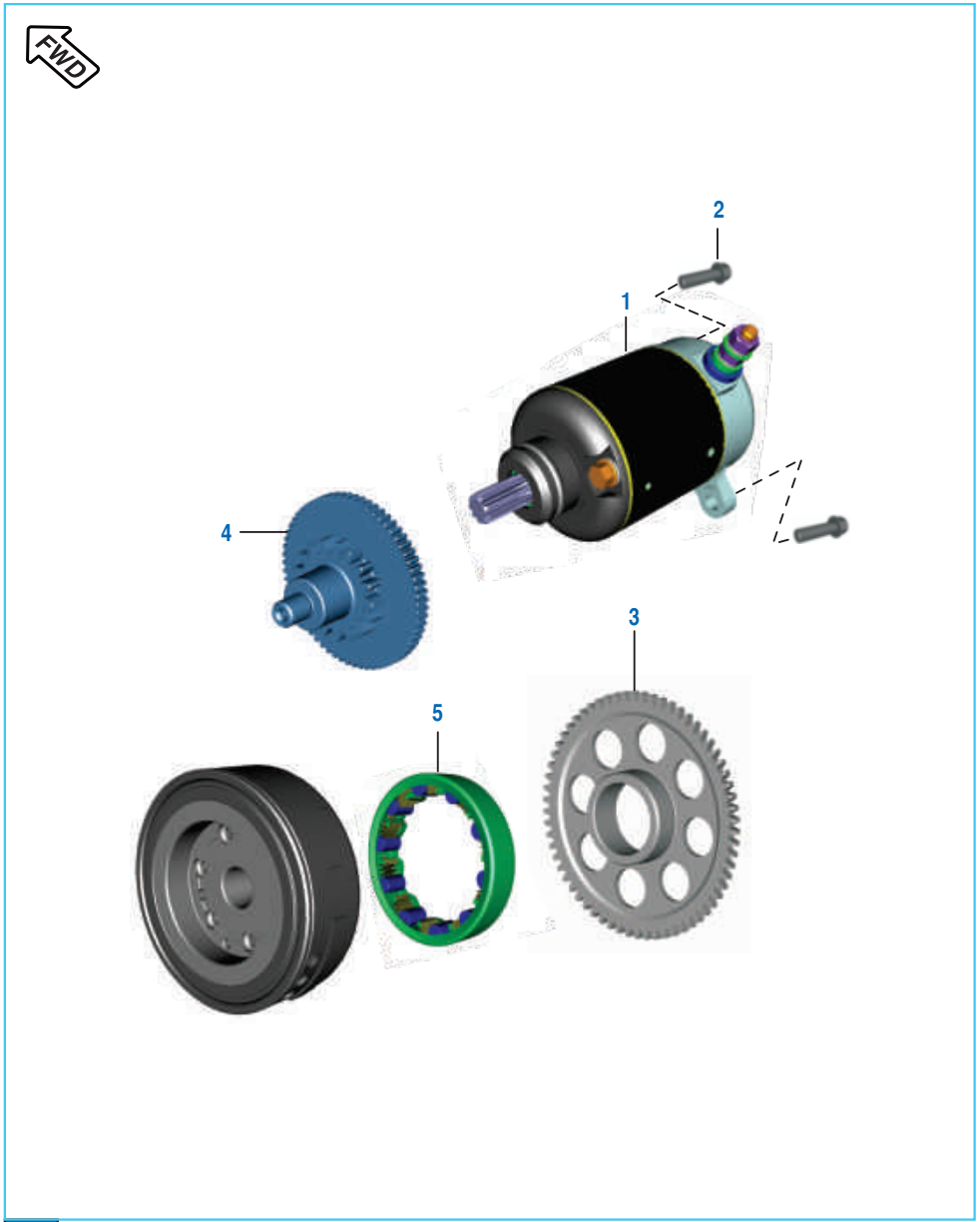

No.	Part No.	Description	Qty. 150 NS	Qty. AS 150	Remarks
1	JE 3516 00	Starter Motor Assly.	1	1	
2	JV 5412 17	Bolt Flange St Motor Mtg	2	2	
3	JE 6214 04	Gear Starter Clutch	1	1	
4	JE 6214 02	Drive Assly.	1	1	
5	GL 6214 14	One Way Clutch	1	1	
6	YJ Z140 02	Roller Starter Clutch	10	10	N.I.
7	YJ Z140 03	Spring Starter Clutch	10	10	N.I.

FWD Front Wheel Direction

Plate No.: 19

Brand ID: 001MC626 - NS 150 (JF02)
Brand ID: 001MC685 - AS 150 (JF05)

Magneto, CDI & H.T. Coil

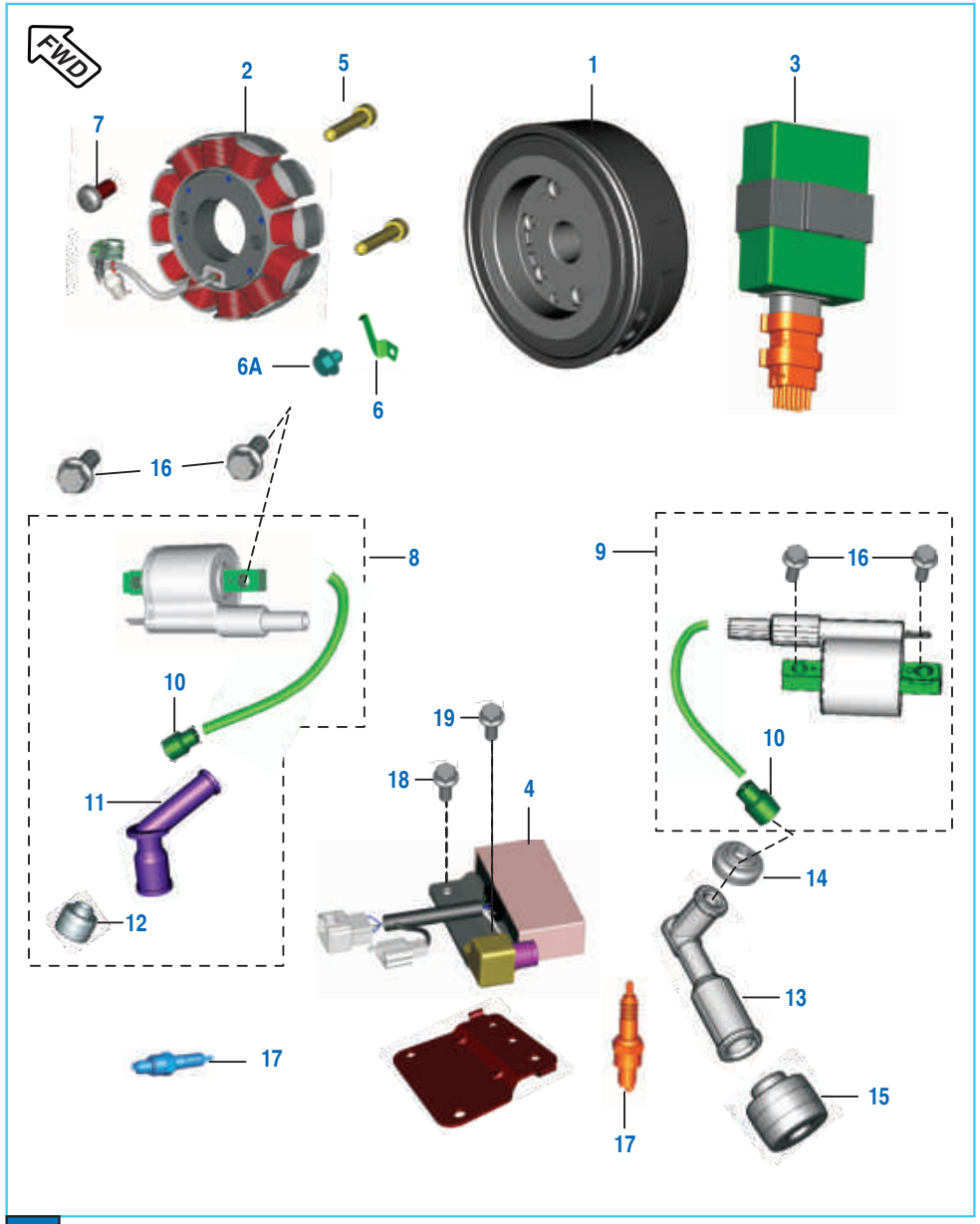

No.	Part No.	Description	Qty. 150 NS	Qty. AS 150	Remarks
1	JE 3510 06	Rotor Assly With St. Clutch	1	1	
2	JE 3510 09	Stator assly- DC	1	1	
3	JE 3512 08	CDI	1	--	
	JE 3512 32	CDI	--	1	
4	JF 4020 00	Regulator Assly	1	1	
5	LA C000 52	Bolt Socket	2	2	
6	JE 5412 43	Bracket Harness	1	1	
6A	KB AB06 08	Screw Pan	1	1	
7	DH 1013 80	Pan Head Screw (Pig up coil)	3	3	
8	JE 3512 14	Coil HT LH	1	--	
	JE 3512 36	Coil HT - 1	--	1	
9	JE 3512 16	Coil HT RH	1	--	
	JE 3512 38	Coil HT - 2	--	1	
10	DD 1110 12	Grommet HT coil	2	2	
11	JE 3512 12	Spark Plug Cap LH	1	1	
12	DD 1110 11	Grommet Spark Plug Cap LH	1	1	
13	AN 1110 15	Cap Spark Plug RH	1	1	
14	JD 3512 06	Grommet Sleeve Plug Cap RH	1	1	
15	DH 1110 13	Grommet Spark Plug Cap RH	1	1	
16	KA DD06 18	Bolt Flanged	4	4	
17	CF 1110 19	Plug - Spark BOSCH :	2	2	UR4AC Or
	DD 1110 18	Plug - Spark Champion	2	2	PRZ9HC
18	KA DF06 14	Bolt Flange	1	1	
19	KA DF06 18	Bolt-Regulator Mtg	1	1	
20	JF 1138 14	Bkt Regulator Loose	1	1	

FWD Front Wheel Direction

Plate No.: 20

Brand ID: 001MC626 - NS 150 (JF02)
Brand ID: 001MC685 - AS 150 (JF05)

Carburettor

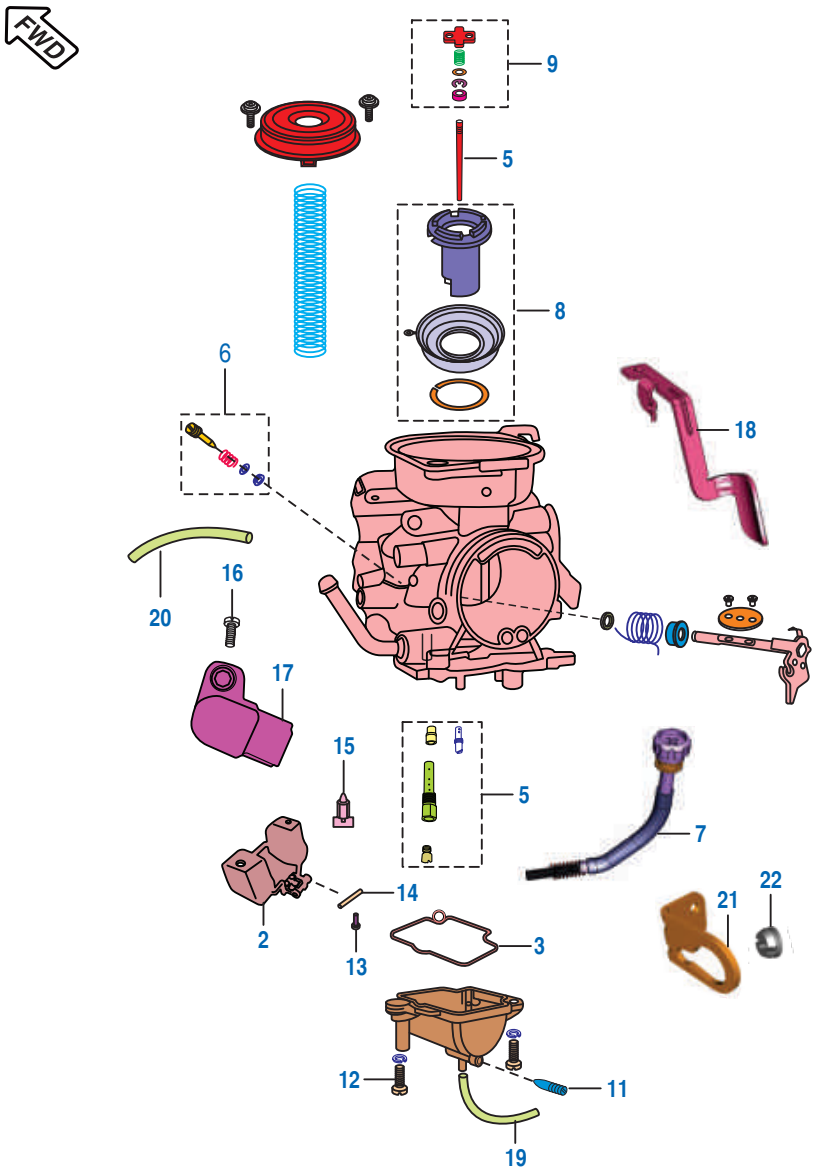

No.	Part No.	Description	Qty. 150 NS	Qty. AS 150	Remarks
1	JE 5812 33	Carburettor	1	1	
2	DK 1210 45	Float Assembly	1	1	
3	DK 1210 58	Gasket Float Chamber	1	1	
4	JL 5810 27	Clamp	1	1	N.I.
5	36 JF00 21	Kit Jet P200	1	1	Refer Page No. 108
6	36 JF00 22	Kit VC Screw P200	1	1	Refer Page No. 109
7	36 JF00 24	Kit Idling Screw	1	1	Refer Page No. 109
8	36 JF00 23	Kit Piston Valve P200	1	1	Refer Page No. 108
9	36 JL00 24	Kit Jet Needle Hardware P200	1	1	Refer Page No. 109
10	36 JL00 23	Kit Gasket / O-ring P200	1	1	Refer Page No. 109
11	JA 5813 14	Drain Screw	1	1	
12	CB 1210 42	Float Chamber Screw	2	2	
13	DH 1210 64	Screw Needle Shaft	1	1	
14	DH 1210 63	Float Needle	1	1	
15	DK 1210 47	Needle Assly.	1	1	
16	39 1780 01	Screw Pan - M5	2	2	
17	JE 3518 00	TPS Assly.	1	1	
18	JL 5812 04	Choke Lever	1	1	
19	JL 5812 05	Tube Drain Carb.	1	1	
20	JL 5812 06	Tube Breather	1	1	
21	JE 5812 39	Bracket Throttle Cable	1	1	
22	JL 5812 03	Grommet	1	1	

FWD Front Wheel Direction

Brand ID: 001MC626 - NS 150 (JF02)
Brand ID: 001MC685 - AS 150 (JF05)

Plate No.: 21

Air Cleaner Complete

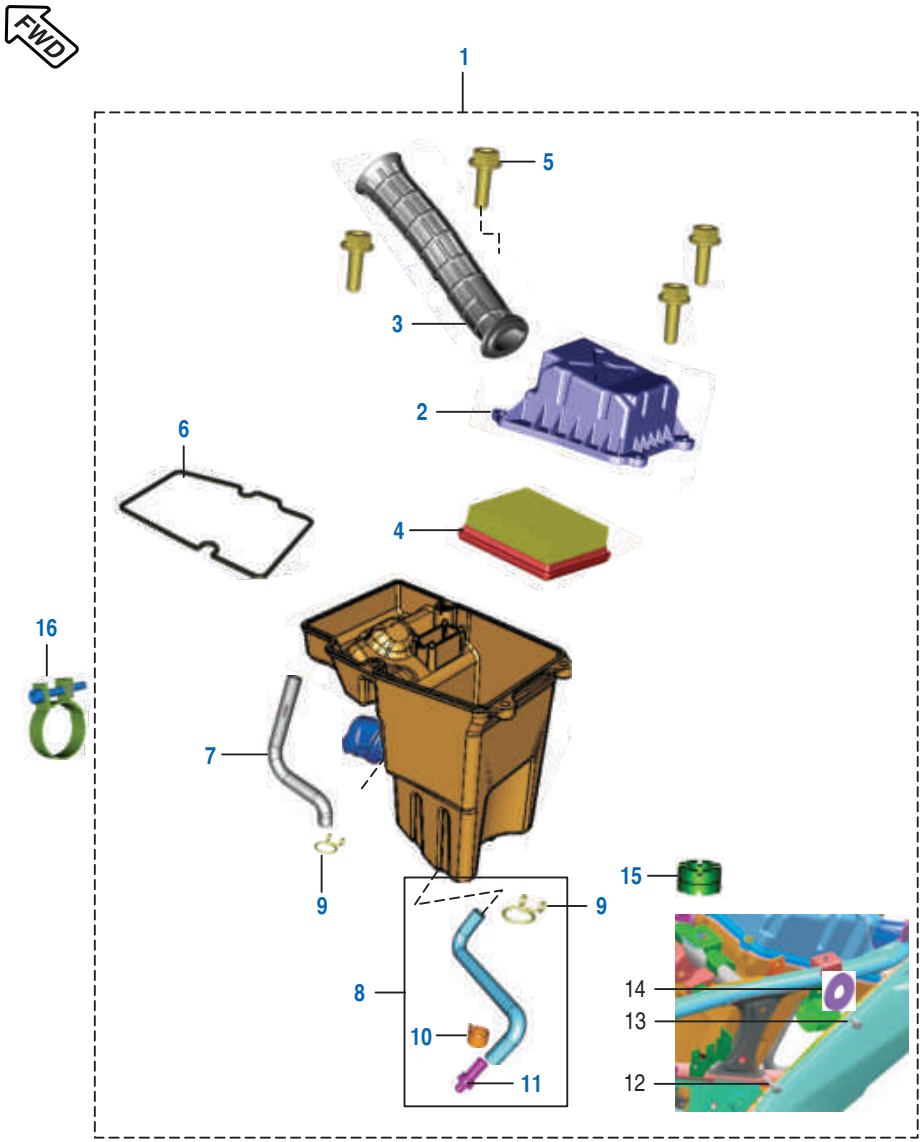

No.	Part No.	Description	Qty. 150 NS	Qty. AS 150	Remarks
1	JE 5810 04	Air Filter Assembly	1	1	
2	JE 5810 06	Top Cover	1	1	
3	JE 5810 10	Duct Entry	1	1	
4	JE 5810 14	Filter Element	1	1	
5	KA DQ06 25	Bolt-Flange	4	4	
6	JE 5810 45	Seal Bottom Cover	1	1	
7	JE 5810 11	Tube Breather	1	1	
8	JL 5810 56	Tube Drain Assembly	1	1	
9	JG 5810 56	Clamp	2	2	
10	DG 1210 02	Clamp	2	2	
11	DS 1211 26	Plug	1	1	
12	KA DA06 30	Bolt Flange M6-L33mm	1	1	RH Mounting
13	KA DM06 10	Bolt Flange M6-L10mm	1	1	RH Mounting
14	LD B000 23	Plain Washer	2	2	RH Mounting
15	JL 1138 09	Grommet Air Filter Resting	1	1	
16	JE 5810 68	Band Clip	1	1	

FWD Front Wheel Direction

Plate No.: 22

Brand ID: 001MC626 - NS 150 (JF02)
Brand ID: 001MC685 - AS 150 (JF05)

Silencer Assembly

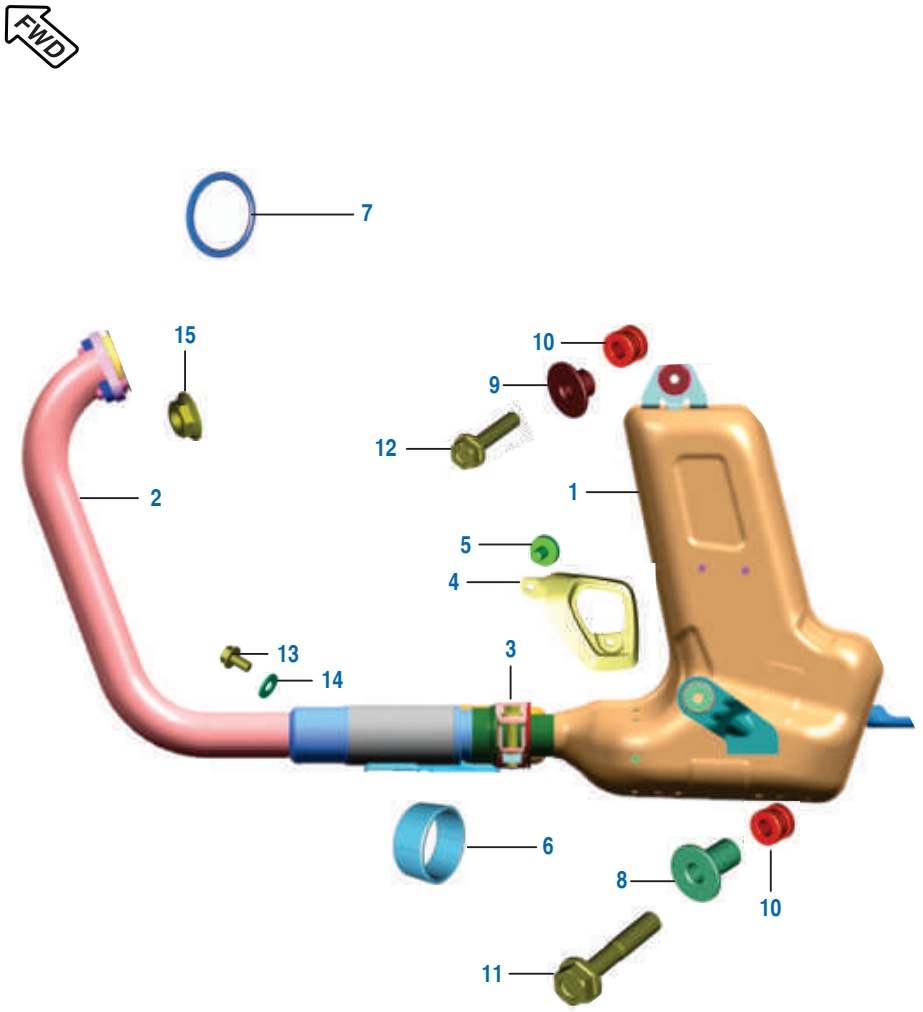

No.	Part No.	Description	Qty. 150 NS	Qty. AS 150	Remarks
1	JE 5910 48	Assembly Muffler	1	1	
2	JE 5910 05	Assly Pipe Exhaust	1	1	
3	JG 5910 38	Band Clip	1	1	
4	JE 5910 46	Heat Shield	1	1	
5	DH 1016 07	Truss Screw	2	2	
6	JG 5910 39	Gasket Muffler Pipe-A	1	1	
7	DJ 1010 64	Gasket Exhaust	1	1	
8	JL 5911 57	Sleeve Bottom	2	2	
9	JL 5911 56	Sleeve Top	4	4	
10	JL 5911 65	Damper Silencer Mounting	4	4	
11	KA DA06 35	Bolt Flanged	2	2	
12	KA DA06 30	Bolt Flanged	2	2	
13	KA DA05 10	Bolt Hex	1	1	
14	39 2492 11	Plain Washer	1	1	
15	JA 5910 40	Flange Nut	2	2	

FWD Front Wheel Direction

Plate No.: 23

Brand ID: 001MC626 - NS 150 (JF02)
Brand ID: 001MC685 - AS 150 (JF05)

Engine Mountings

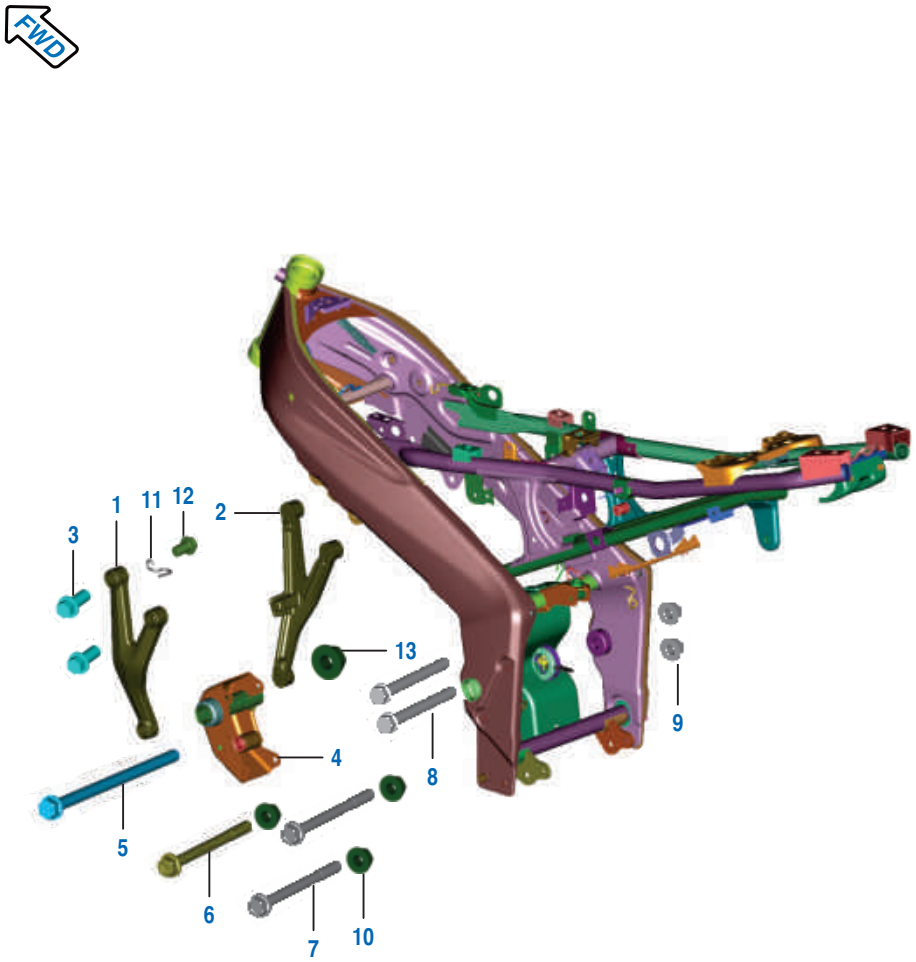

No.	Part No.	Description	Qty. 150 NS	Qty. AS 150	Remarks
1	JF 1134 11	Engine Stay LH	1	1	
2	JF 1134 04	Engine Stay RH	1	1	
3	39 1951 04	Bolt - Flanged Small	4	4	
4	52 JF00 63	Bracket Engine Mtg Front	1	1	
5	JF 1110 52	Engine Mtg Bolt Front	1	1	
6	KA DF08 90	Bolt Flanged M8x90	1	1	
7	KA DF08 80	Bolt Flanged M8x80	2	2	
8	JF 1134 12	Flanged Bolt M10X110	2	2	Alternate
9	LC G000 14	Nut Flanged M10	2	2	
10	39 1970 15	Hex Nut/Flanged	3	3	
11	JF 1138 08	Hook Drain Tube	1	1	
12	KA EM06 10	Bolt Flanged	1	1	
13	LC G000 16	Nut Flanged M10	1	1	

FWD Front Wheel Direction

Plate No.: 24

Brand ID: 001MC626 - NS 150 (JF02)
Brand ID: 001MC685 - AS 150 (JF05)

Seat Assembly / Seat Lock

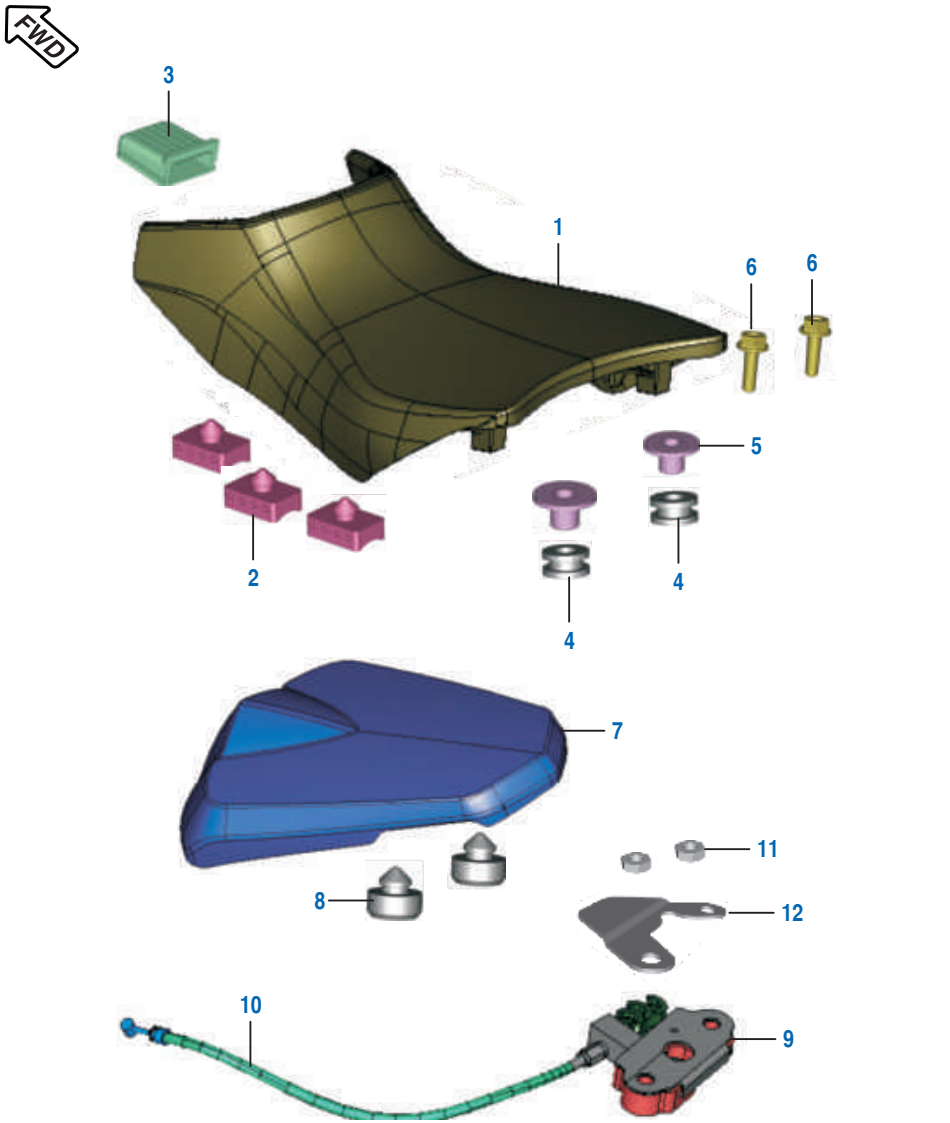

No.	Part No.	Description	Qty. 150 NS	Qty. AS 150	Remarks
1	JL 1910 01	Seat Assy Comp Front	1	1	
2	36 JL00 13	Kit Damper For Seat	1	1	
3	DK 2110 07	Damper Seat Front	1	1	
4	JG 1910 08	Collar -Seat	2	2	
5	FD 2110 06	Grommet - Seat	2	2	
6	DS 1612 87	Flange Bolt - M6	2	2	
7	JL 1910 04	Seat Assy Comp Rear	1	1	
8	JD 1910 06	Damper Round	2	2	
9	JG 2326 01	Lock Assy Seat Rear	1	1	
10	JG 2326 06	Seat Lock Cable	1	1	
11	KC JD12 12	Nut	2	2	
12	JL 2326 04	Cover Seat Lock	1	1	

FWD Front Wheel Direction

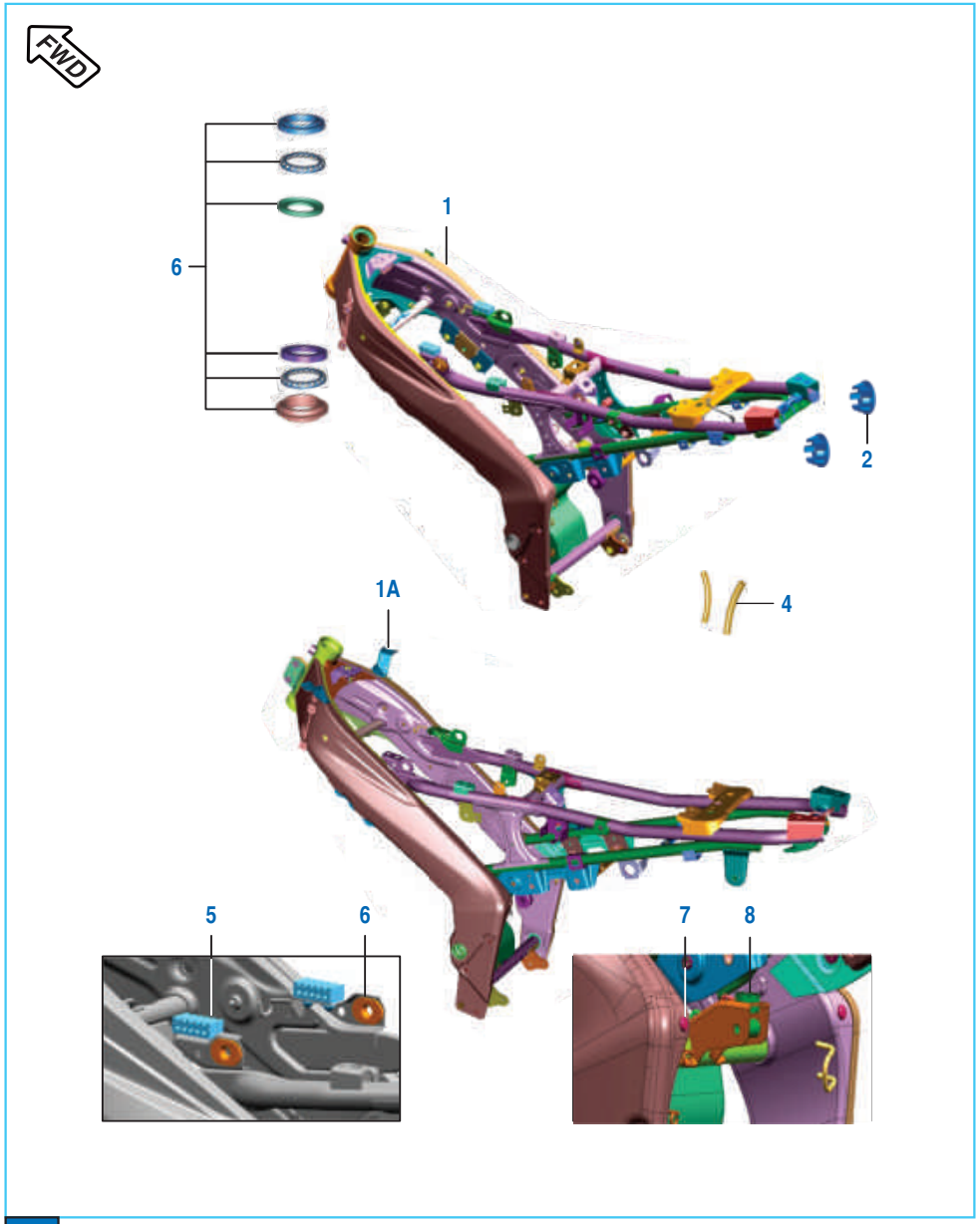

FWD Front Wheel Direction

Plate No.: 25

Brand ID: 001MC626 - NS 150 (JF02)
Brand ID: 001MC685 - AS 150 (JF05)

Frame and Frame Fittings

No.	Part No.	Description	Qty. 150 NS	Qty. AS 150	Remarks
1	JF 1110 51	Frame Assly Complete	1	--	Bearing Race
1A	JF 1111 36	Frame Assly Complete	--	1	Bearing Race
2	JL 1111 03	Cap Tube End	2	2	
3	36 JG00 11	Kit Steering head bearing	1	1	Refer Page No. 118
4	JB 1812 23	Beading	2	2	
5	DS 2110 04	Damper Seat I	2	2	
6	DS 1410 12	Grommet Side Cover	2	2	
7	DX 1610 66	Pad Brace Fender	2	2	
8	JL 1138 09	Grommet Air Filter Resting	1	1	

Plate No.: 26

Brand ID: 001MC626 - NS 150 (JF02)
Brand ID: 001MC685 - AS 150 (JF05)

Swing Arm / Rear Shock Absorber

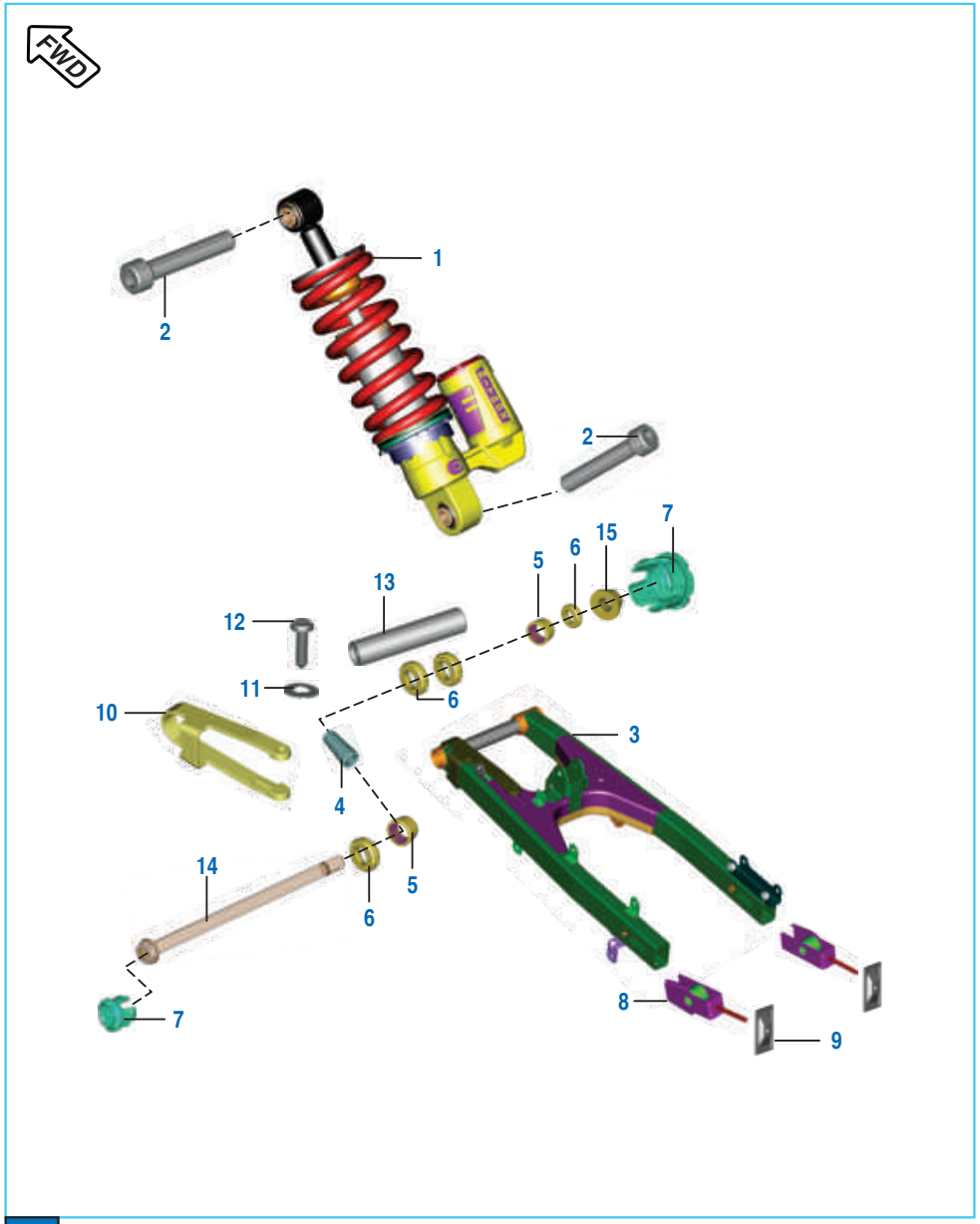

No.	Part No.	Description	Qty. 150 NS	Qty. AS 150	Remarks
1	JF 1220 12	Shock Absorber Mono	1	1	
2	LA C000 19	Bolt Socket M10 X 1.25 X 55	2	2	
3	JF 1220 04	Assembly Swing Arm Comp	1	1	
4	DG 1710 16	Sleeve	2	2	
5	DG 1710 18	Bearing - Needle	2	2	
6	DG 1710 19	Seal - Oil	4	4	
7	JL 1111 09	Cap Swing Arm Tube	2	2	
8	JZ 1220 08	Adjuster Chain LH & RH	2	2	
9	JZ 1220 12	Plate Adjuster Chain	2	2	
10	JF 1220 06	Slider Chain	1	1	
11	39 0454 11	Washer - Plain	2	2	
12	39 0553 02	Screw - Self Tapping	2	2	
13	JL 1220 08	Spacer Central Swing Arm	2	2	
14	DG 1710 15	Shaft - Swing Arm	1	1	
15	DG 1710 17	Nut	1	1	

FWD Front Wheel Direction

Plate No.: 27

Brand ID: 001MC626 - NS 150 (JF02)
Brand ID: 001MC685 - AS 150 (JF05)

Pillion Foot Rest / Holder

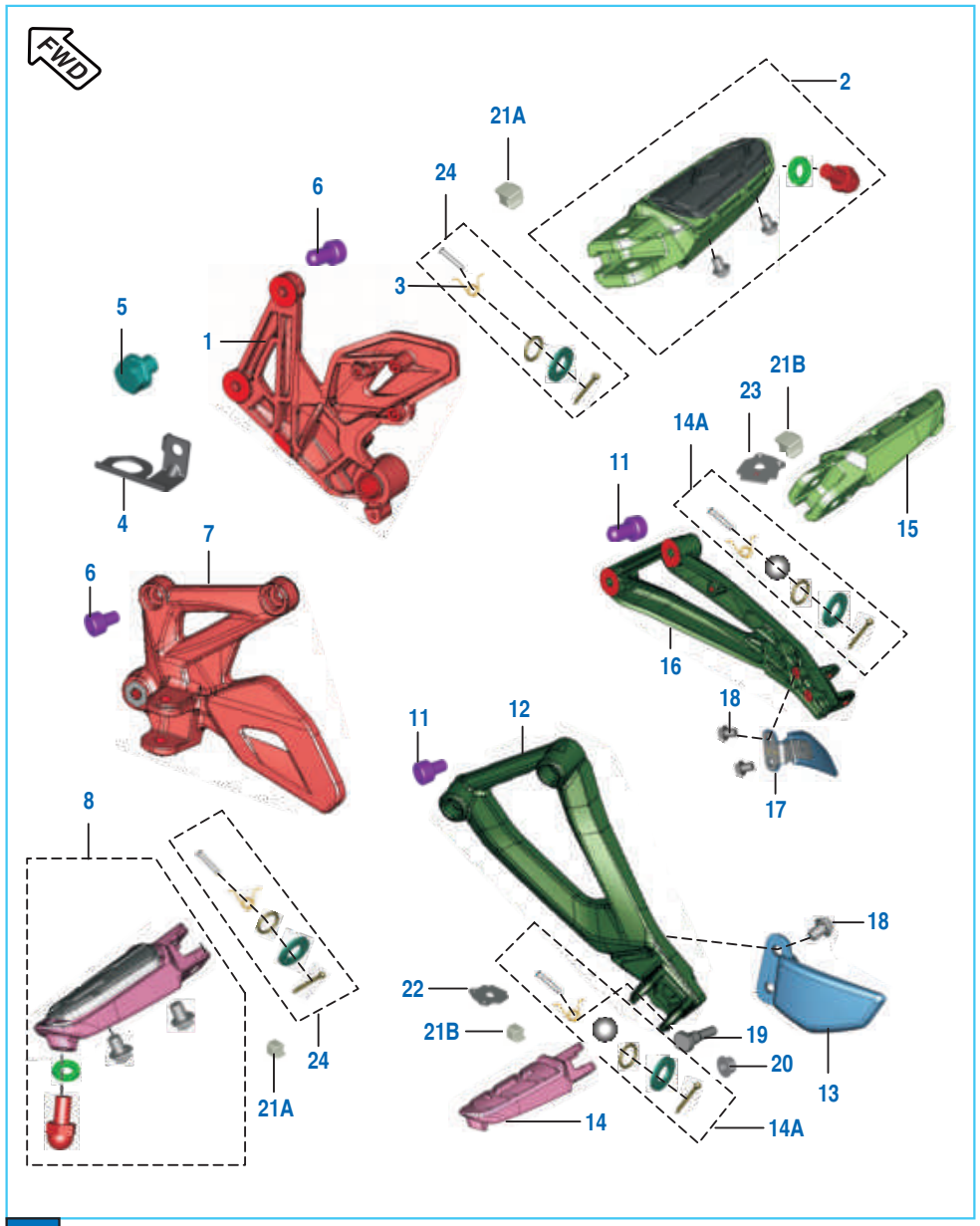

No.	Part No.	Description	Qty. 150 NS	Qty. AS 150	Remarks
1	JL 1130 02	Holder Step RH	1	1	
2	JF 1130 09	Step Assy Main RH	1	1	
3	JL 1130 12	Spring Torsion	2	2	
4	JL 1130 33	Bracket Rear Brake Switch	1	1	
5	39 2475 04	Bolt - Hexagon Flange M6	1	1	
6	KA CA08 20	Bolt-Socket Dia-08 L-20	4	4	
7	JL 1130 34	Holder Step LH	1	1	
8	JL 1130 00	Step Assly Main LH	1	1	
9	LD A000 13	Washer Plain	1	1	
10	LA C000 16	Bolt Socket M8X35	4	4	
12	JL 1130 13	Step Holder- Pillion LH	1	1	
13	JL 1130 26	Flap Pillion Holder LH	1	1	
14	JL 1130 14	Step Pillion LH	1	1	
14A	36 JL00 15	Kit Pillion Hardware	2	2	
15	JL 1130 16	Step Pillion RH	1	1	
16	JL 1130 15	Step Holder - Pillion RH	1	1	
17	JL 1130 27	Flap Pillion Holder RH	1	1	
18	39 1954 04	Bolt - Flanged Small	4	4	
	KA DE06 10	Bolt Flanged	2	2	
19	JL 2312 06	Bolt Special M10	1	1	
20	39 1055 15	Nut	1	1	
21A	JZ 1130 61	Rubber Pad Footrest	2	2	
21B	JL 1130 36	Rubber Pad Footrest	2	2	
22	JL 1130 20	Lock Plate LH	1	1	
23	JL 1130 32	Lock Plate RH	1	1	
24	36 JL00 41	Kit Main Step Hardware	2	2	

FWD Front Wheel Direction

Plate No.: 28

Brand ID: 001MC626 - NS 150 (JF02)
Brand ID: 001MC685 - AS 150 (JF05)

Mudguard - Front & Rear

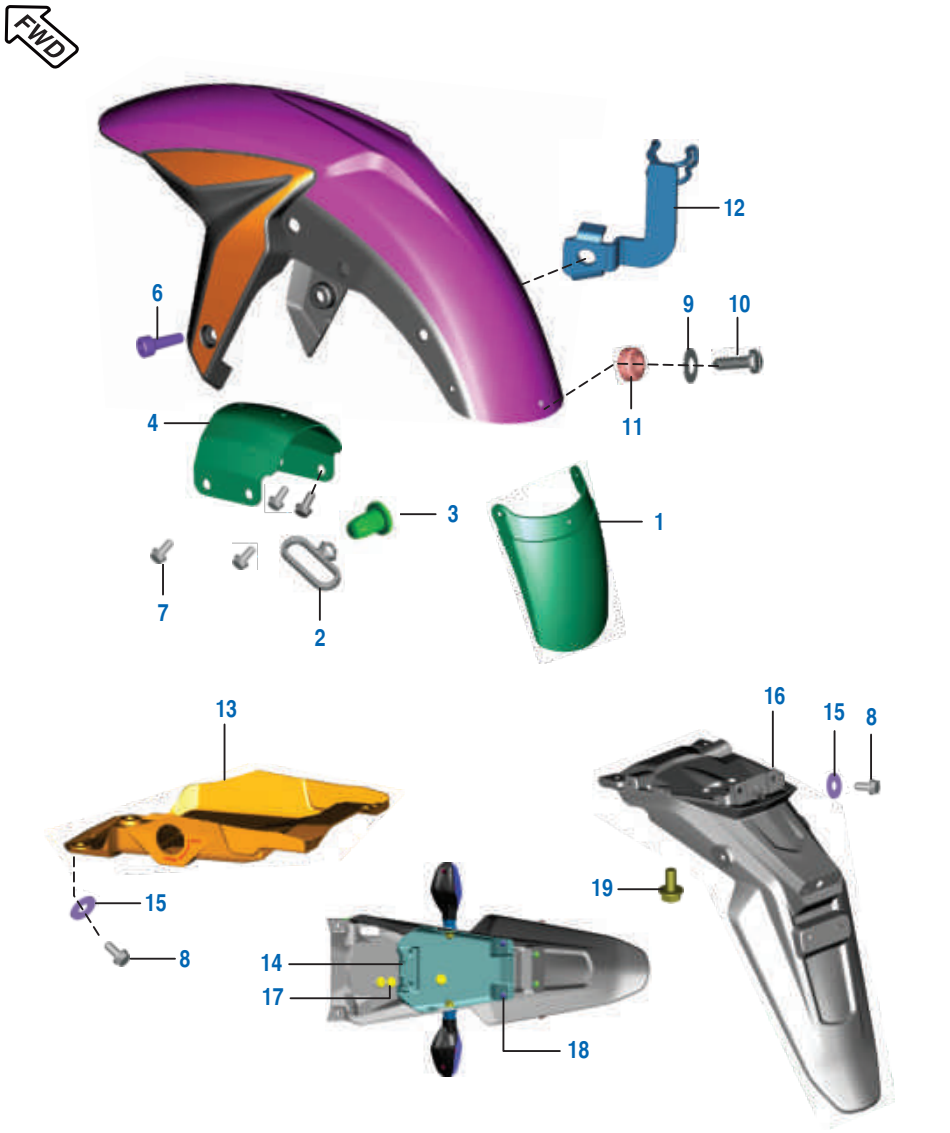

No.	Part No.	Description	Qty. 150 NS	Qty. AS 150	Remarks
1	JF 1814 03	Mud Flap -Front	1	1	
2	DS 1611 25	Guide - Cable	1	1	
3	DJ 1610 69	Nail - Cable Guide	1	1	
4	JF 1814 02	Bracket Brace Fender	1	1	
5	JL 1814 11	Washer Front-Fender-Mtg	2	2	
6	KA CA06 16	Bolt	2	2	
7	KA DF08 20	Bolt - Flanged	4	4	
8	KA DF06 14	Bolt - Flanged	--	4	
9	KD AA05 10	Washer - Plain	6	6	
10	KB BB05 12	Screw - Pan Head M5	3	3	
11	39 0326 15	Nut - Nyloc M5 X 0.8	3	3	
12	JL 1318 11	Bracket -Hose Clamp	1	--	
	JL 1138 34	Bracket -Hose Clamp	--	1	
13	JL 1812 09	Fender Rear Front	1	1	
14	JL 1814 36	Under Tray	--	1	
15	LD B000 23	Washer - Plain	--	4	
16	JL 1814 33	Fender Rear	--	1	
17	DJ 2011 73	Grommet For Cable	--	3	
18	KB UC05 14	Screw Truss	--	2	
19	KA DF06 12	Bolt Flanged	--	2	

FWD Front Wheel Direction

Plate No.: 29

Brand ID: 001MC626 - NS 150 (JF02)
Brand ID: 001MC685 - AS 150 (JF05)

Stand Assembly

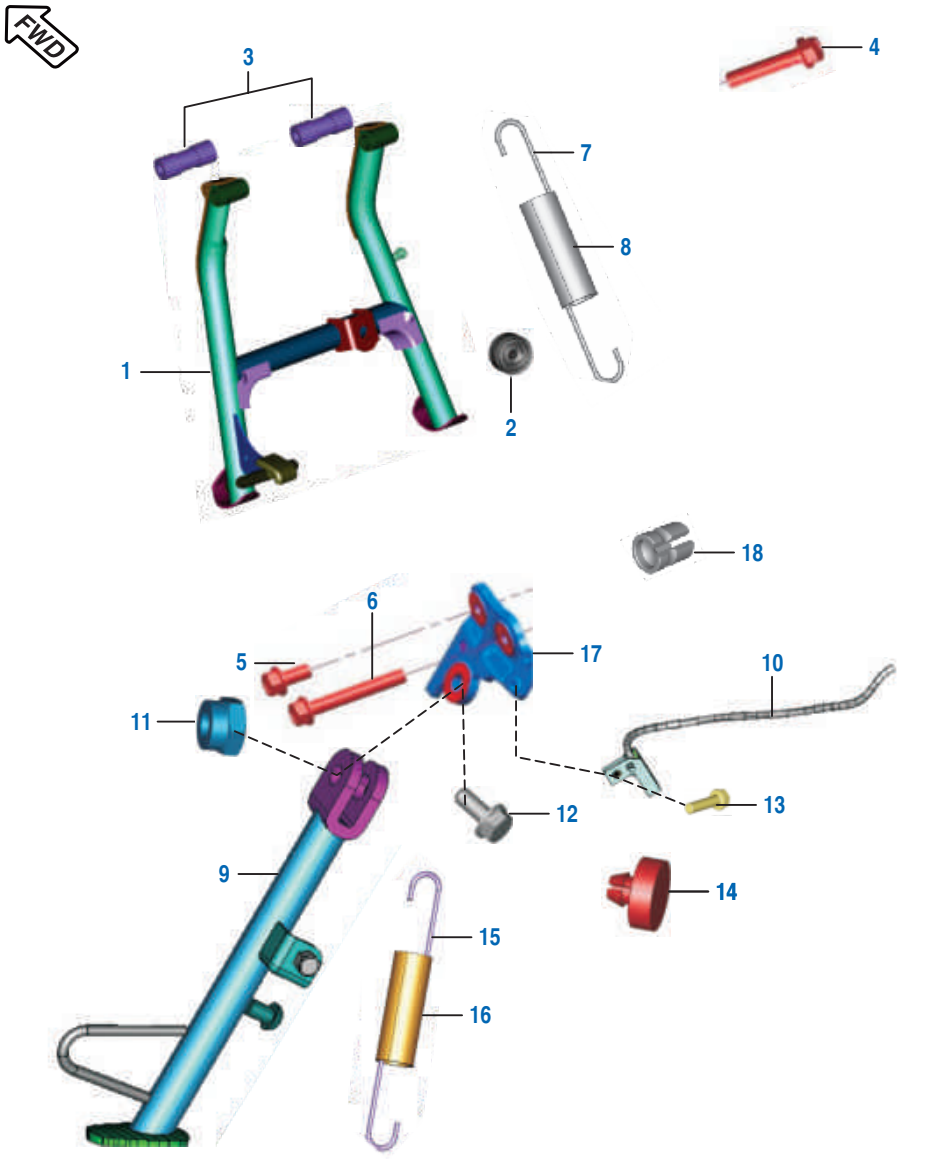

No.	Part No.	Description	Qty. 150 NS	Qty. AS 150	Remarks
1	JF 1132 02	Center Stand	1	1	
2	DG 1611 24	Damper	1	1	
3	JL 1132 10	Bush Main Stand LH	2	2	
4	LA D001 34	Bolt - Flanged M8	1	1	
5	39 1689 04	Bolt - Hexagon	1	1	
6	LA D001 35	Bolt Flanged	1	1	
7	JL 1132 07	Spring Main Stand	1	1	
8	JL 1132 12	Cover Spring Main Stand	1	1	
9	JL 1132 01	Assembly Side Stand	1	1	
10	JL 4014 02	Switch Side Stand	1	1	
11	39 0422 15	Nut - Nyloc M10	1	1	
12	DF 1611 02	Bolt For Side Stand Mounting	1	1	
13	KA DB05 16	Bolt - Flanged	1	1	
14	JL 4036 00	Magnet Assembly	1	1	
15	JL 1132 09	Spring Side Stand	1	1	
16	DH 1611 46	Cover - Spring Side Stand	1	1	
17	JL 1132 02	Bracket Side Stand Mtg	1	1	
18	JL 1132 23	Bush-Anker Pin	1	1	

FWD Front Wheel Direction

Plate No.: 30

Brand ID: 001MC626 - NS 150 (JF02)
Brand ID: 001MC685 - AS 150 (JF05)

Tube / Tyre / Rim

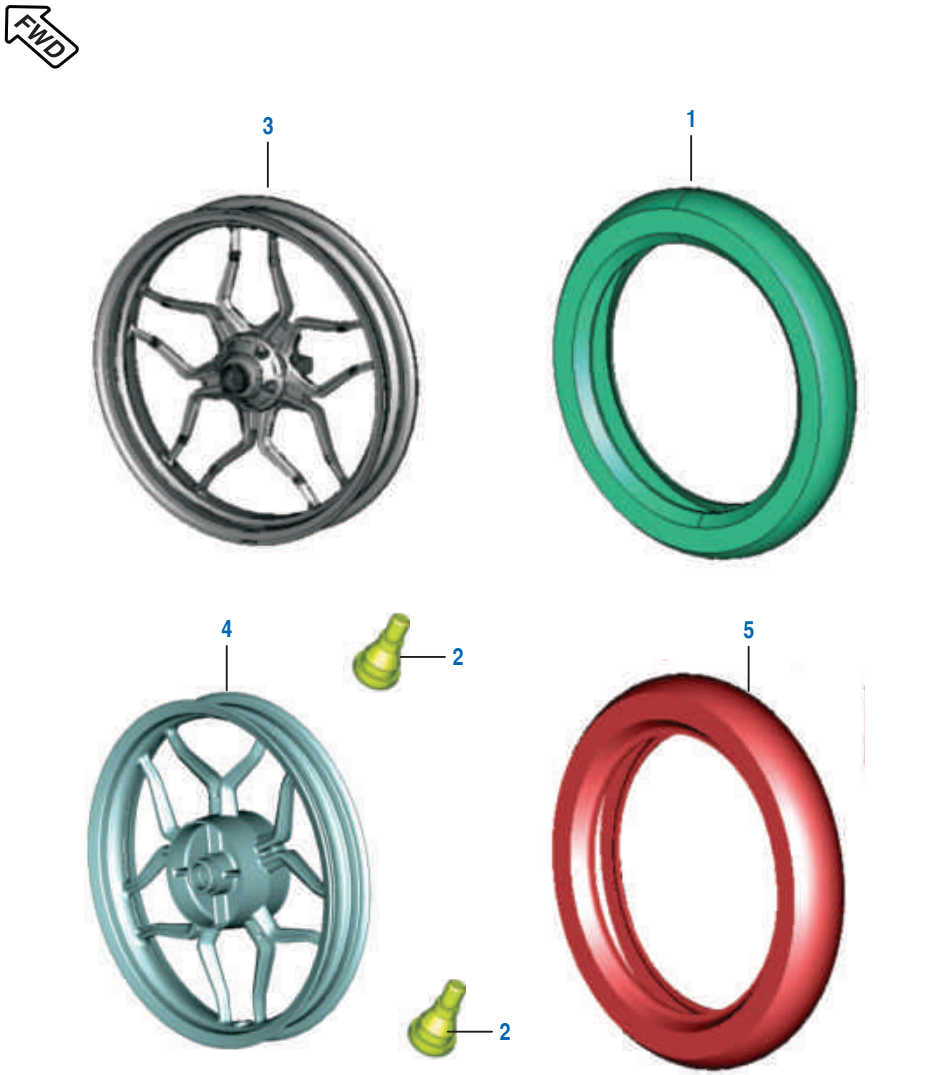

No.	Part No.	Description	Qty. 150 NS	Qty. AS 150	Remarks
1	JF 1310 10	Tyre Tubeless (Size 80/100-17)	1	1	Not Serviceable
2	DK 1510 26	Valve Tubeless Tyre	2	2	
3	JF 1310 09	Wheel Rim 1.85X17	1	1	
4	JF 1312 06	Wheel Rim 2.15X17	1	1	
5	JF 1312 22	Tyre 100/90-17	1	1	Not Serviceable

FWD Front Wheel Direction

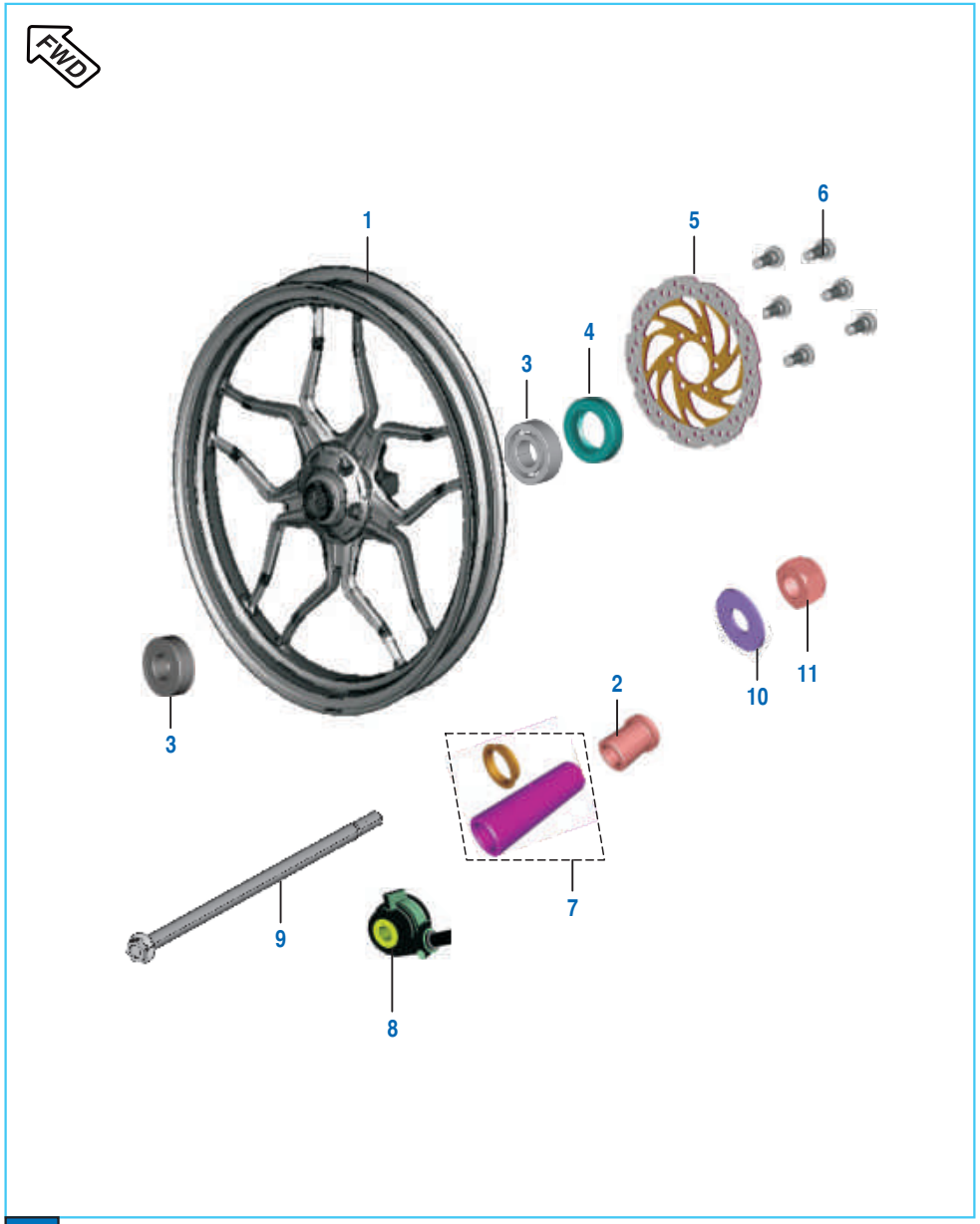

Front Wheel Direction

Plate No.: 31

Brand ID: 001MC626 - NS 150 (JF02)
Brand ID: 001MC685 - AS 150 (JF05)

Front Hub

No.	Part No.	Description	Qty. 150 NS	Qty. AS 150	Remarks
1	JF 1310 09	Wheel Front	1	1	
2	JN 1310 03	Spacer	1	1	
3	KP BB63 01	Bearing - Ball	2	2	
4	30 1510 33	Seal - Oil	1	1	
5	JF 1318 00	Disc Front	1	1	
6	JD 1318 11	Special Bolt M8	6	6	
7	DE 1510 06	Spacer Collar	1	1	
8	JN 1316 03	Case Meter Hsg. with Sensor	1	--	
	JF 4024 04	Case Meter Hsg. with Sensor	--	1	
9	JF 1310 08	Axle	1	1	
10	AN 1013 47	Washer	1	1	
11	KC Jd12 12	Nut - U M12	1	1	

Plate No.: 32

Brand ID: 001MC626 - NS 150 (JF02)
Brand ID: 001MC685 - AS 150 (JF05)

Front Master Cylinder

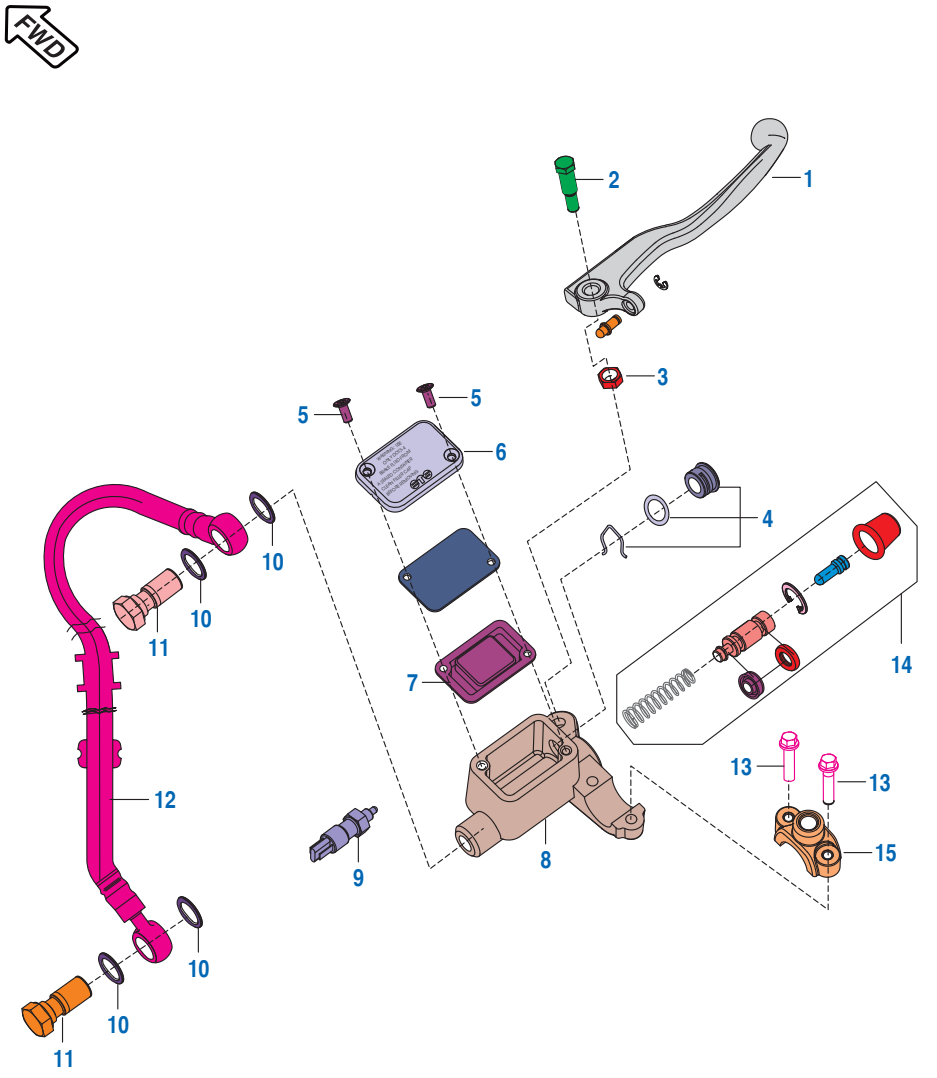

No.	Part No.	Description	Qty. 150 NS	Qty. AS 150	Remarks
1	JG 1610 10	Lever Front Brake	1	1	
2	DJ 1910 29	Bolt Front Bracket I	1	1	
3	DJ 1910 30	Nut	1	1	
4	DH 1910 62	Oil Window Kit	1	1	
5	DJ 1910 31	Screw	2	2	
6	DE 1910 29	Cover - Reservoir	1	1	
7	DE 1910 28	Diaphragm	1	1	
8	JF 1318 07	Master Cylinder with lever	1	1	
9	DJ 2011 00	Brake Switch	1	1	
10	DE 1910 10	Washer - Copper	4	4	
11	DE 1910 11	Bolt - Banjo	2	2	
12	JF 1318 02	Hose Assembly	1	--	
	JF 1319 01	Hose Assembly	--	1	
13	LA D000 37	Bolt Flanged M8X1X50	2	2	
14	36 JF00 18	Kit End- M Cyl Major+grease	1	1	
14A	36 JF00 19	Kit End- M Cyl Minor+grease	1	1	N.I.
15	DE 1910 33	Clamp - Holder : RH	1	1	
16	36 JF00 20	Kit End-M Cyl Seal+grease	1	1	N.I.

FWD Front Wheel Direction

Plate No.: 33

Brand ID: 001MC626 - NS 150 (JF02)
Brand ID: 001MC685 - AS 150 (JF05)

Front Disc Brake

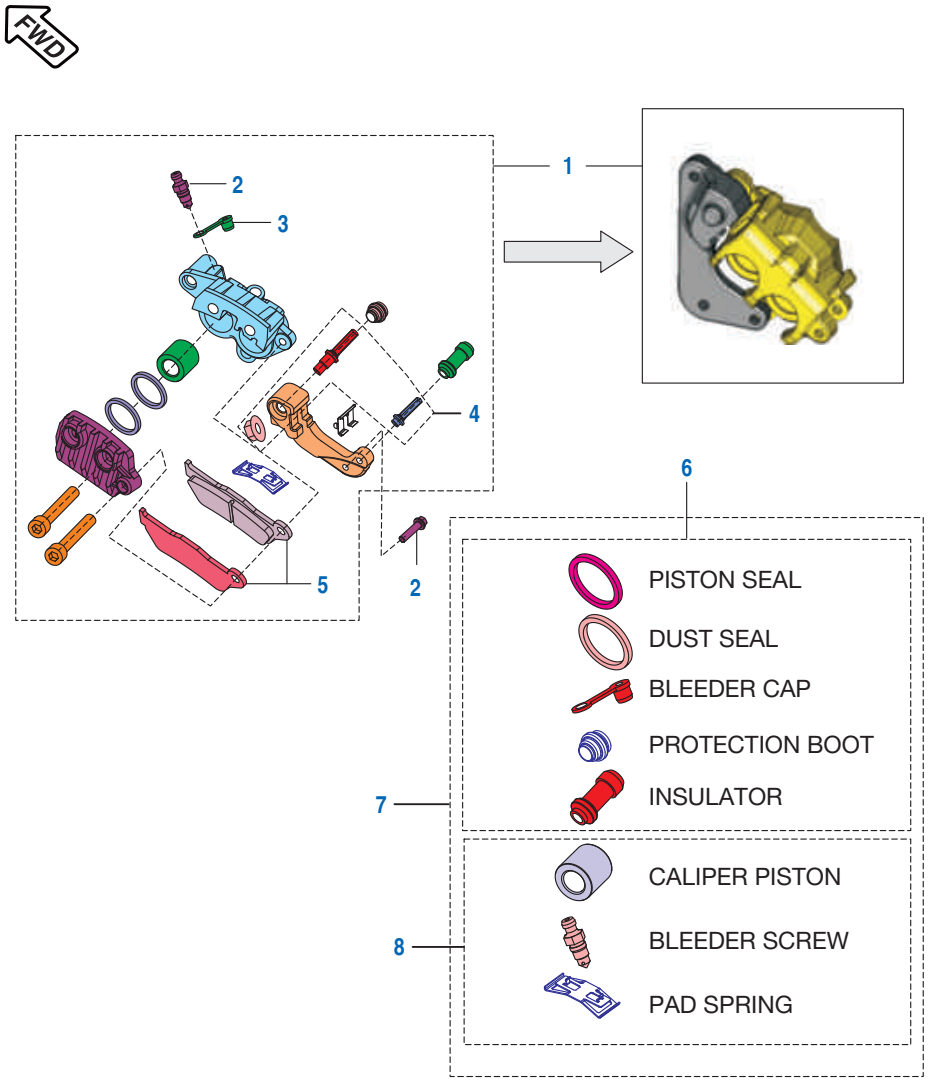

No.	Part No.	Description	Qty. 150 NS	Qty. AS 150	Remarks
1	JF 1318 06	Caliper Assy Brake Front	1	1	
2	DJ 1510 69	Screw Bleeder	1	1	
3	DJ 1510 70	Bleeder Cap	1	1	
4	JW 1318 10	Anker Pin Kit	1	1	
5	JW 1318 07	Disc Pad	1	1	
6	36 JF00 16	Kit End-cal Minor with Grease	1	1	
7	36 JF00 15	Kit End-cal Mjr with Grease	1	1	
8	36 JF00 17	Kit End-cal Mini with Grease	1	1	

FWD Front Wheel Direction

Plate No.: 34

Brand ID: 001MC626 - NS 150 (JF02)
Brand ID: 001MC685 - AS 150 (JF05)

Rear Hub

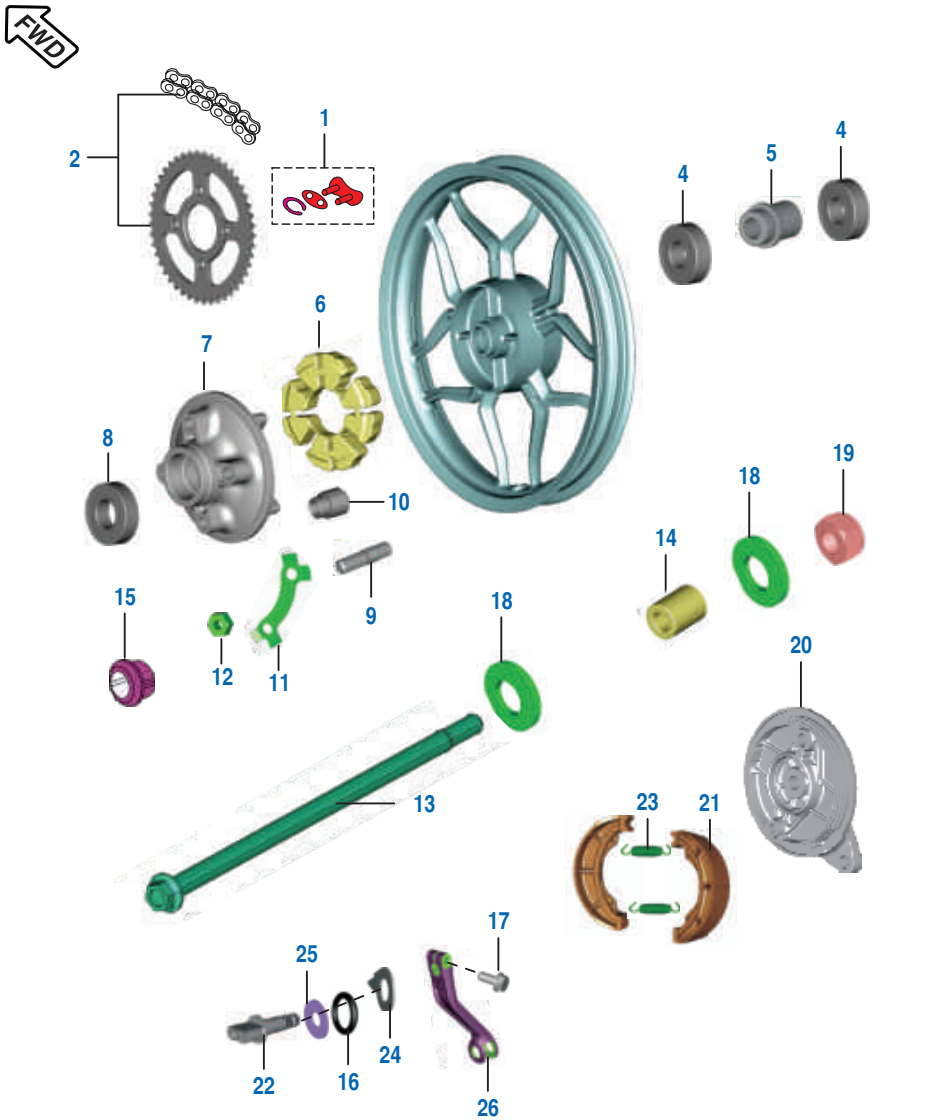

No.	Part No.	Description	Qty. 150 NS	Qty. AS 150	Remarks
1	JD 1410 03	Lock Set	1	1	
2	36 JF00 06	Kit Chain Sprocket	1	1	Refer Page No. 115
3	KP BB63 02	Bearing - Ball	1	1	
4	KP BB62 02	Bearing - Ball	1	1	
5	30 1510 75	Collar Bearing Assy	1	1	
6	JG 1312 19	Coupling Rubber	1	1	
7	JN 1312 03	Coupling	1	1	
8	KP BC60 04	Bearing Coupling	1	1	
9	DS 1510 73	Stud	4	4	
10	JD 1312 12	Sleeve	1	1	
11	PF 1312 20	Washer Lock	2	2	
12	LC B000 05	Nut	4	4	
13	JF 1312 10	Axle	1	1	
14	JF 1312 09	Spacer Panel Side	1	1	
15	JD 1312 10	Collar Assly	1	1	
16	01 1701 22	O-Ring	1	1	
17	JB 1312 24	Hex Bolt	1	1	
18	LD B000 29	Washer	2	2	
19	LC J000 02	Nut - U	1	1	
20	JF 1316 01	Panel Rear Brake	1	1	
21	30 1511 05	Brake Shoe Assly	1	1	
22	JC 1510 04	Cam Brake Assly	1	1	
23	30 1510 69	Spring	2	2	
24	JC 1510 06	Indicator	1	1	
25	JC 1510 12	Special Washer	1	1	
26	JF 1316 00	Cam Lever	1	1	

FWD Front Wheel Direction

Plate No.: 35

Brand ID: 001MC626 - NS 150 (JF02)
Brand ID: 001MC685 - AS 150 (JF05)

Rear Brake Pedal, Brake Rod, Torque Rod

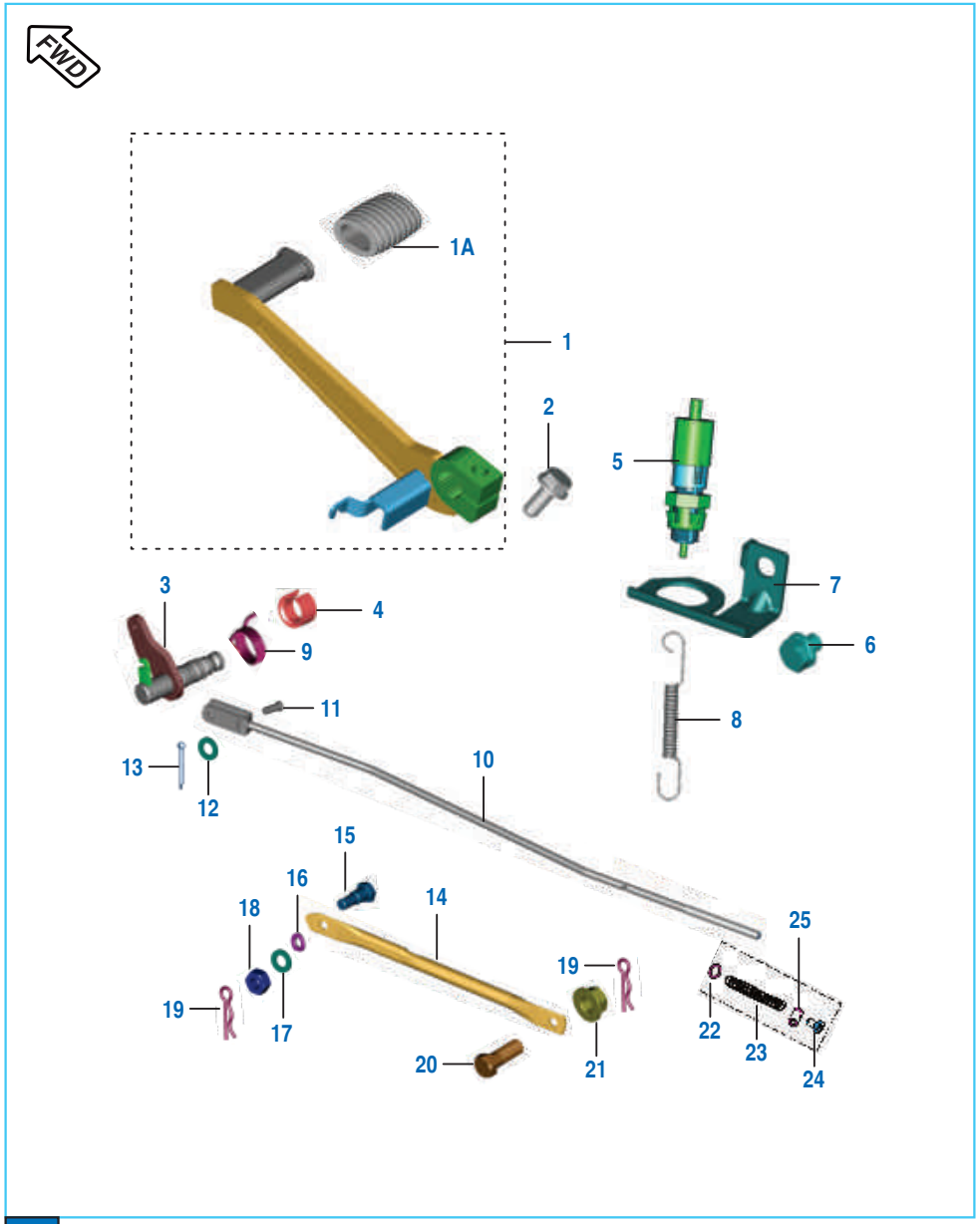

No.	Part No.	Description	Qty. 150 NS	Qty. AS 150	Remarks
1	JF 1610 01	Brake Pedal	1	1	
1A	DG 1013 39	Damper	1	1	
2	39 1769 04	Bolt - Flanged : M8	1	1	
3	JL 1610 05	Shaft Assy Brake Lever	1	1	
4	DH 1910 13	Spacer Brake Shaft assly.	1	1	
5	31 2010 79	Switch - Rear Brake	1	1	
6	39 2475 04	Hex. head bolt	1	1	
7	JL 1130 33	Bracket Rear brake switch	1	1	
8	JL 1610 06	Spring Rear Brake Switch	1	1	
9	DH 1910 06	Spring - Brake Pedal	1	1	
10	JL 1318 10	Brake Rod	1	1	
11	30 1910 38	Pin	1	1	
12	39 0198 11	Washer	2	2	
13	39 0808 08	Split Pin	1	1	
14	DJ 1510 42	Rod Torque	1	1	
15	DH 1510 29	Step Bolt	1	1	
16	39 0789 12	Spring Washer	1	1	
17	39 0454 11	Plain Washer	1	1	
18	39 0694 15	Hex Lock Nut	1	1	
19	39 0807 08	Split Pin	2	2	
20	DG 1910 48	Bolt	1	1	
21	39 1225 15	Hex Nut Flanged	1	1	
22	39 0199 11	Plain Washer	1	1	
23	JC 1910 08	Spring Brake Rod	1	1	
24	JC 1910 07	Nut Brake Rod	1	1	
25	JC 1910 11	Pin Brake	1	1	

FWD Front Wheel Direction

Plate No.: 36

Brand ID: 001MC626 - NS 150 (JF02)
Brand ID: 001MC685 - AS 150 (JF05)

Handle Bar Assly

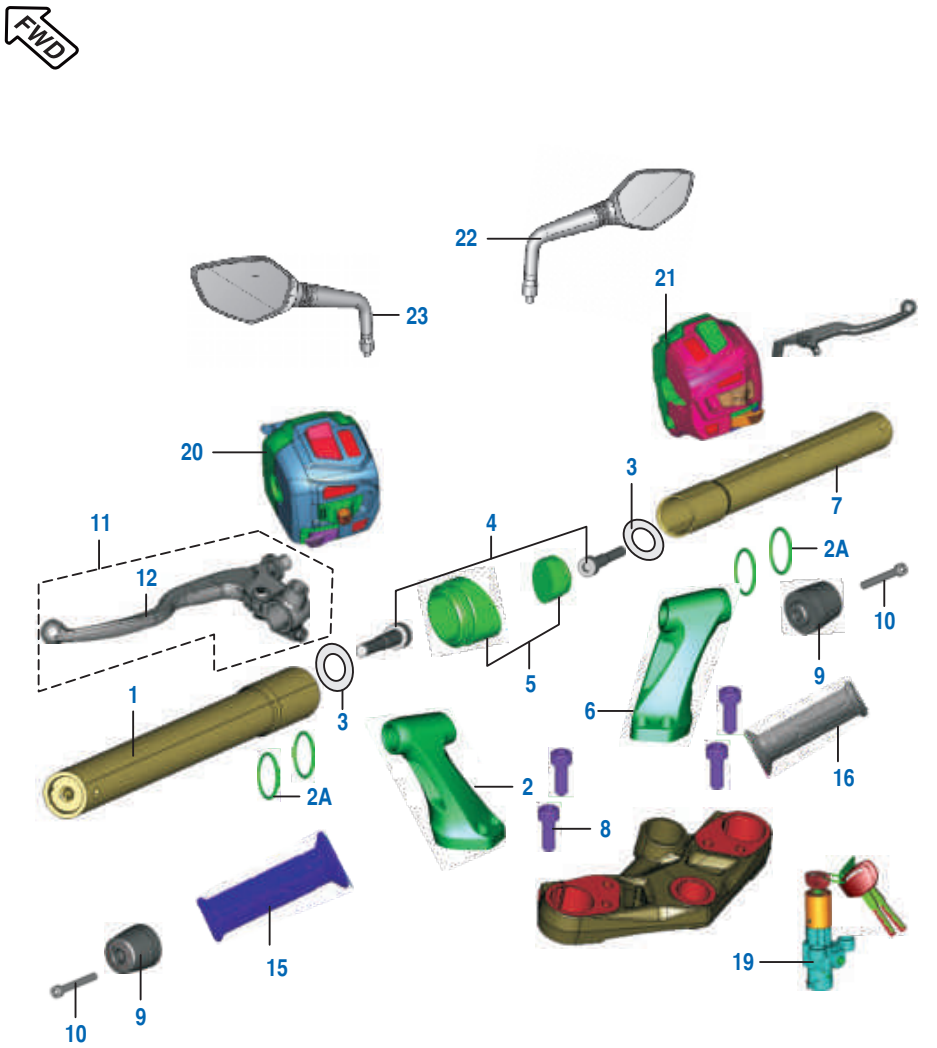

No.	Part No.	Description	Qty. 150 NS	Qty. AS 150	Remarks
1	JL 1510 21	Handle Bar Tube LH assly.	1	1	
2	JF 1510 25	Holder Handle LH	1	1	
2A	JL 1510 38	O ring	4	4	
3	39 1180 11	Washer - Plain	2	2	
4	LA C000 20	Bolt Socket M8X1.25Px55L	2	2	
5	JL 1510 28	Plug Handle Holder	2	2	
6	JF 1510 27	Holder Handle RH	1	1	
7	JL 1510 34	Handlebar Tube Assy RH	1	1	
8	DG 1810 08	Bolt - Socket	4	4	
9	JL 1510 35	Handlebar Weight	2	2	
10	39 2427 04	Bolt-Hexagon Socket	2	2	
11	JL 1610 11	Lever & Holder Assly LH	1	--	
	JL 1610 15	Lever & Holder Assly LH	--	1	
12	JL 1610 12	Lever LH	1	--	
	JG 1610 08	Lever Clutch	--	1	
13	DJ 2012 46	Clutch Switch (6Amp Diode)	1	--	
	JL 4014 11	Clutch Switch	--	1	
15	JL 1610 03	Handle Grip LH	1	1	
16	JL 1610 08	Grip Hand Assy RH	1	--	
	DT 1610 05	Grip Hand Assy RH	--	1	
17	JG 1510 22	Pipe - Throttle	1	1	N.I.
18	JL 1510 23	Lock Set 3 In 1	1	--	
	DT 2326 01	Lock Set 3 In 1	--	1	
19	JL 4014 03	Switch Ignition	1	--	
	DT 4014 05	Switch Ignition	--	1	
20	JL 4014 00	Switch Control LH	1	--	
	JL 4014 09	Switch Control LH	--	1	
21	JL 4014 01	Switch Control RH	1	--	
	JL 4014 10	Switch Control RH	--	1	
22	JL 2316 01	Mirror Assy RH	1	1	
23	JL 2316 00	Mirror Assy LH	1	1	

FWD Front Wheel Direction

Plate No.: 37

Brand ID: 001MC626 - NS 150 (JF02)
Brand ID: 001MC685 - AS 150 (JF05)

Front Fork

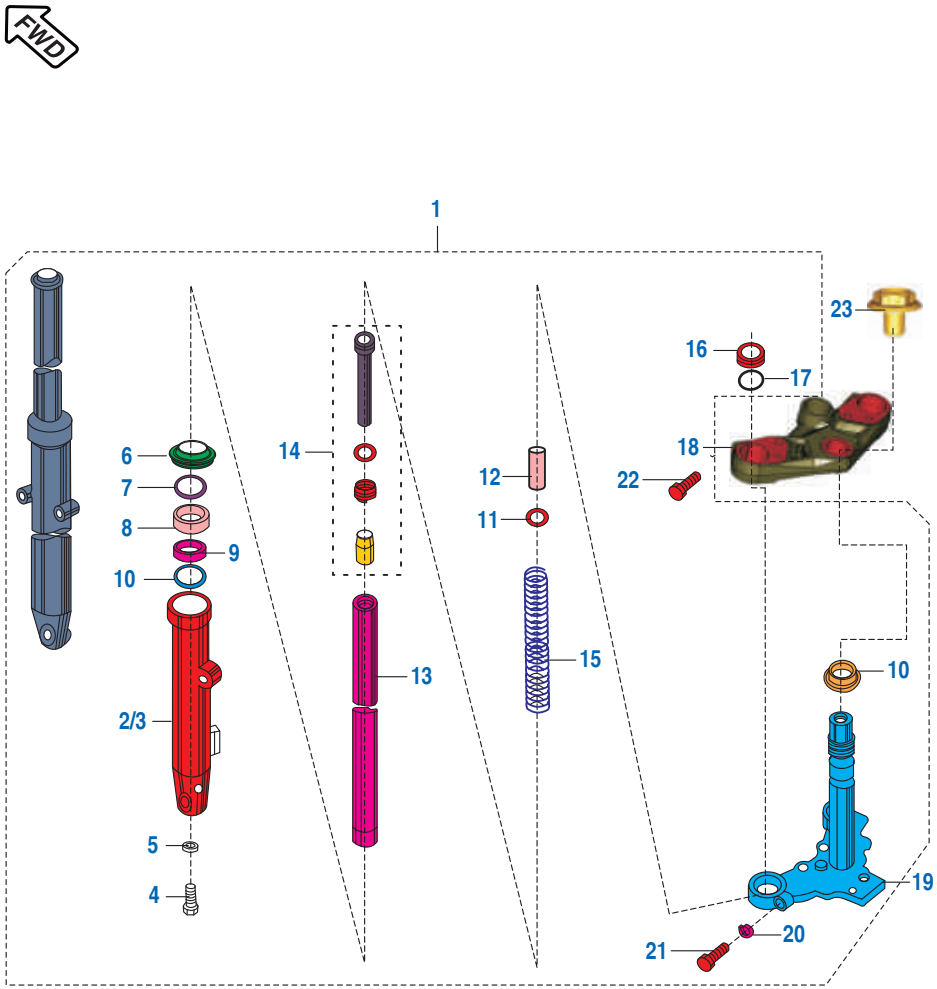

No.	Part No.	Description	Qty. 150 NS	Qty. AS 150	Remarks
1	JF 1510 18	Fork Assly- Front	1	1	
2	JF 1510 31	Tube Outer LH	1	1	
3	JF 1510 32	Tube Outer RH	1	1	
4	30 1810 25	Socket Headed Bolt	2	2	
5	30 1810 26	Copper Washer	2	2	
6	DJ 1810 89	Inner Dust Seal	2	2	
7	DJ 1810 88	Oil Seal Stopper	2	2	
8	DJ 1810 87	Oil Seal	2	2	
9	DS 1810 70	Guide Bush	2	2	
10	DS 1810 72	Washer	2	2	
11	DM 1810 10	Washer	2	2	
12	JF 1510 36	Spacer Tube	2	2	
13	JF 1510 33	Fork Pipe Inner	2	2	
14	36 JF00 31	Cylinder Complete Fork	2	2	Refer Page No. 115
15	JF 1510 34	Spring Main Spring	2	2	
16	DH 1810 15	Fork Bolt	2	2	
17	30 1810 29	O' Ring	2	2	
18	JF 1510 19	Upper Bracket	1	1	
19	JF 1210 04	Under Bkt Assy Complete	1	1	
20	DK 1810 25	Spring Washer	2	2	
21	DK 1810 28	Bolt	2	2	
22	DG 1810 08	Bolt - Socket	2	2	
23	JY 1510 11	Steering Top Bolt	1	1	

FWD Front Wheel Direction

Plate No.: 38

Brand ID: 001MC626 - NS 150 (JF02)
Brand ID: 001MC685 - AS 150 (JF05)

Shroud Assembly

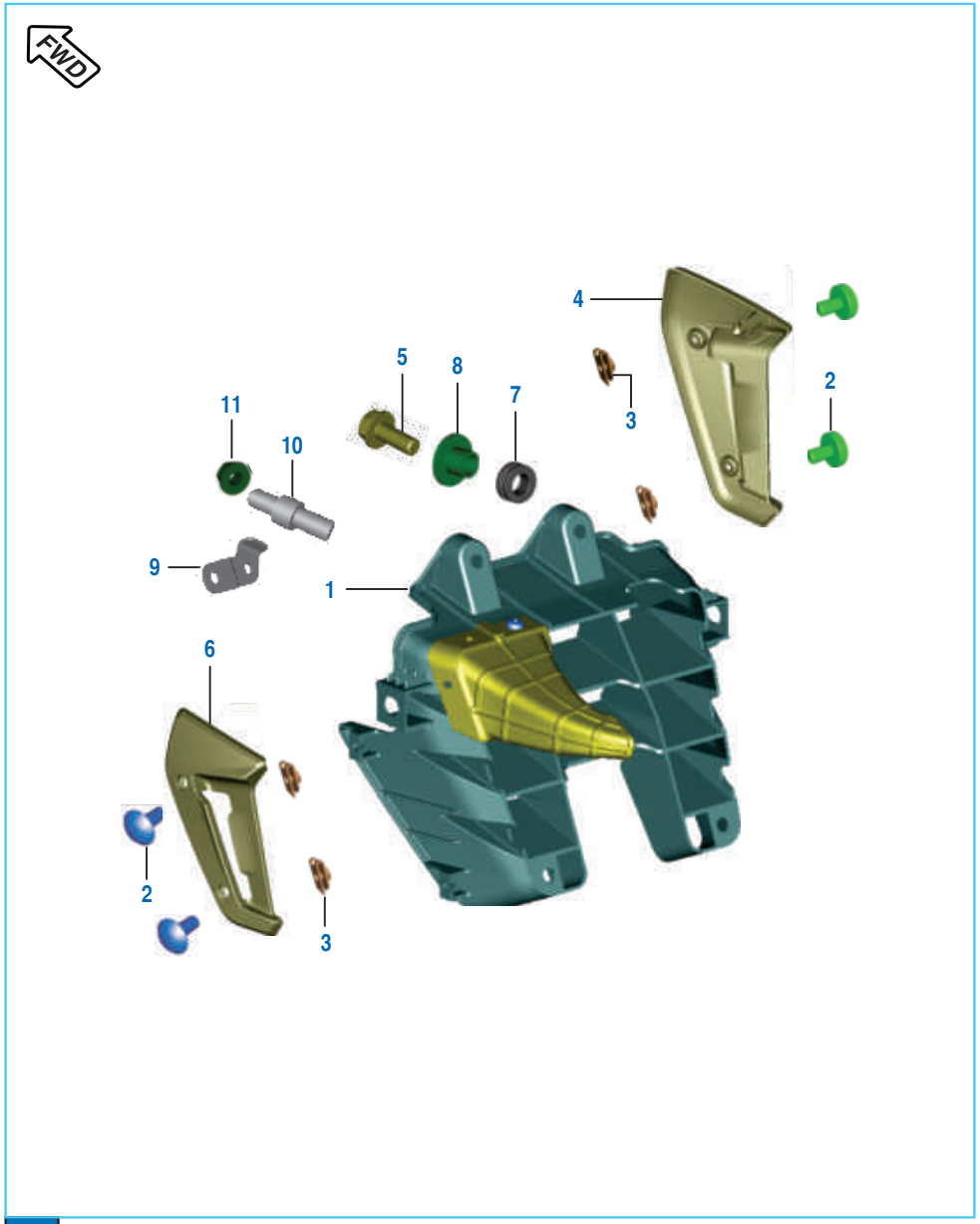

No.	Part No.	Description	Qty. 150 NS	Qty. AS 150	Remarks
1	JE 5810 47	Assy Shroud	1	1	
2	KB UA05 14	Screw - Truss	4	--	
3	DJ 1612 29	Clip Nut M5	4	--	
4	JF 1812 17	Shroud RH	1	--	
5	KA DA06 16	Bolt - Flange	3	3	
6	JF 1812 16	Shroud LH	1	--	
7	JL 1812 56	Grommet For Radiator	4	4	
8	JW 1710 15	Collar For Grommet	4	4	
9	JF 1138 23	Brakcet Horn	1	1	
10	JF 1138 22	Stud Horn Mtg	1	1	
11	KC BA06 05	Nut	1	1	

FWD Front Wheel Direction

Plate No.: 39

Brand ID: 001MC626 - NS 150 (JF02)
Brand ID: 001MC685 - AS 150 (JF05)

Petrol Tank, Cap Tank and Gauge Fuel

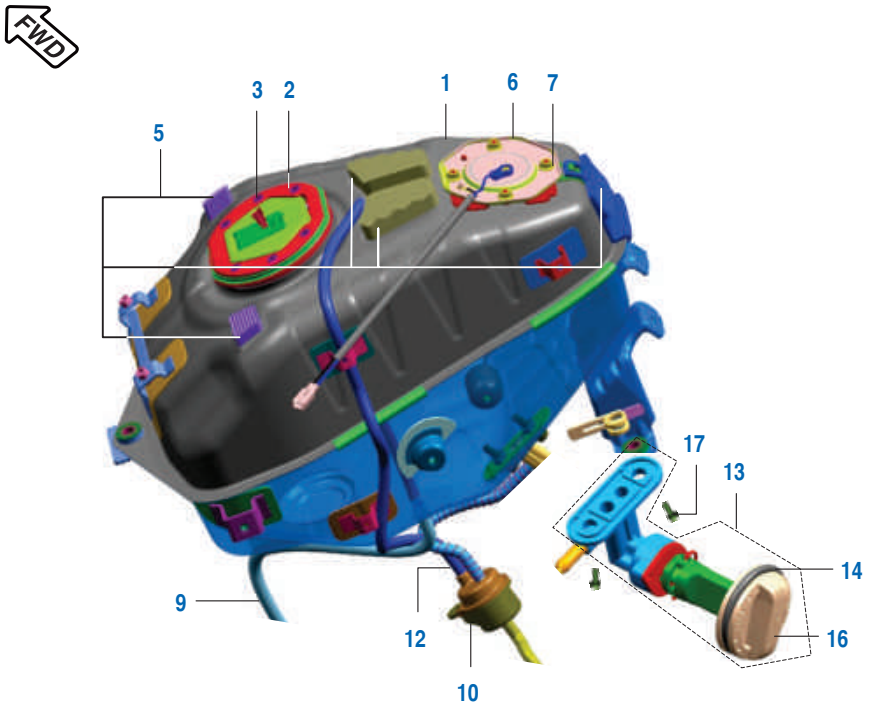

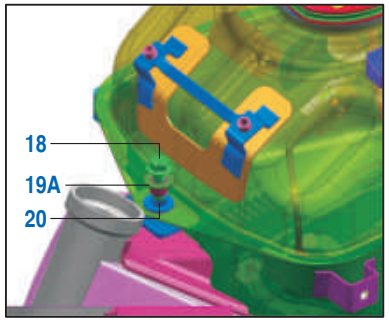

Front Mounting

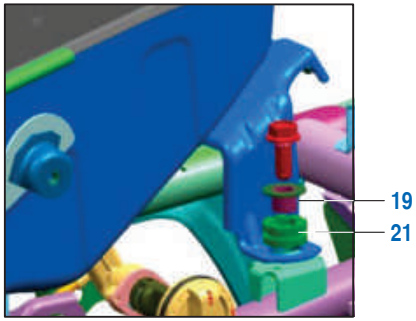

Rear Mounting

No.	Part No.	Description	Qty. 150 NS	Qty. AS 150	Remarks
1	JL 1710 81	Tank Assembly	1	1	
2	56 JL04 01	Cap Tank (Moon Light Silver)	1	1	
3	KA CB05 16	Bolt Master	6	6	
4	JL 1710 49	Damper Ring Tank Cap	1	1	
5	36 JI00 12	Kit Tank Damper	1	1	
6	JL 4026 02	Sensor Fuel Level	1	1	
6A	39 2758 21	'O' ring for Fuel Sensor	1	1	N.I.
7	KC GA05 05	Nut - Flange	4	4	
8	JL 1710 37	Breather Tube	1	1	
9	JL 1710 63	Pipe - Drain	1	1	
10	JL 1718 02	Filter Inline	1	1	
11	JF 1718 00	Tube Fuel (Carburettor)	1	1	
12	JL 1710 35	Tube Fuel (Tank)	1	1	
13	JL 1718 00	Tap Fuel Assembly	1	1	
14	JL 1710 60	O Ring-For Knob	1	1	
15	JL 1718 03	Pin Snap For Knob	1	1	
16	JL 1718 01	Knob Fuel Tap	1	1	
17	DD 1410 22	Bolt - Flanged	2	2	
18	KA DF0 820	Bolt Tank mtg Front	3	--	
	39 1946 04	Bolt Tank mtg Front	--	3	
19	JL 1710 19	Sleeve Tank Mtg (Rear)	2	2	
19A	DT 1710 75	Sleeve Tank Mtg (Front)	2	2	
20	JL 1710 18	Grommet Tank Mtg Front	1	1	
21	JL 1710 20	Grommet Tank Mtg Rear	2	2	
22	JL 1710 96	Sealing Ring Fuel Cock	1	1	N.I.

FWD Front Wheel Direction

Plate No.: 40

Brand ID: 001MC626 - NS 150 (JF02)
Brand ID: 001MC685 - AS 150 (JF05)

Fittings - Tank Cover & Flap - Pulsar 150 NS

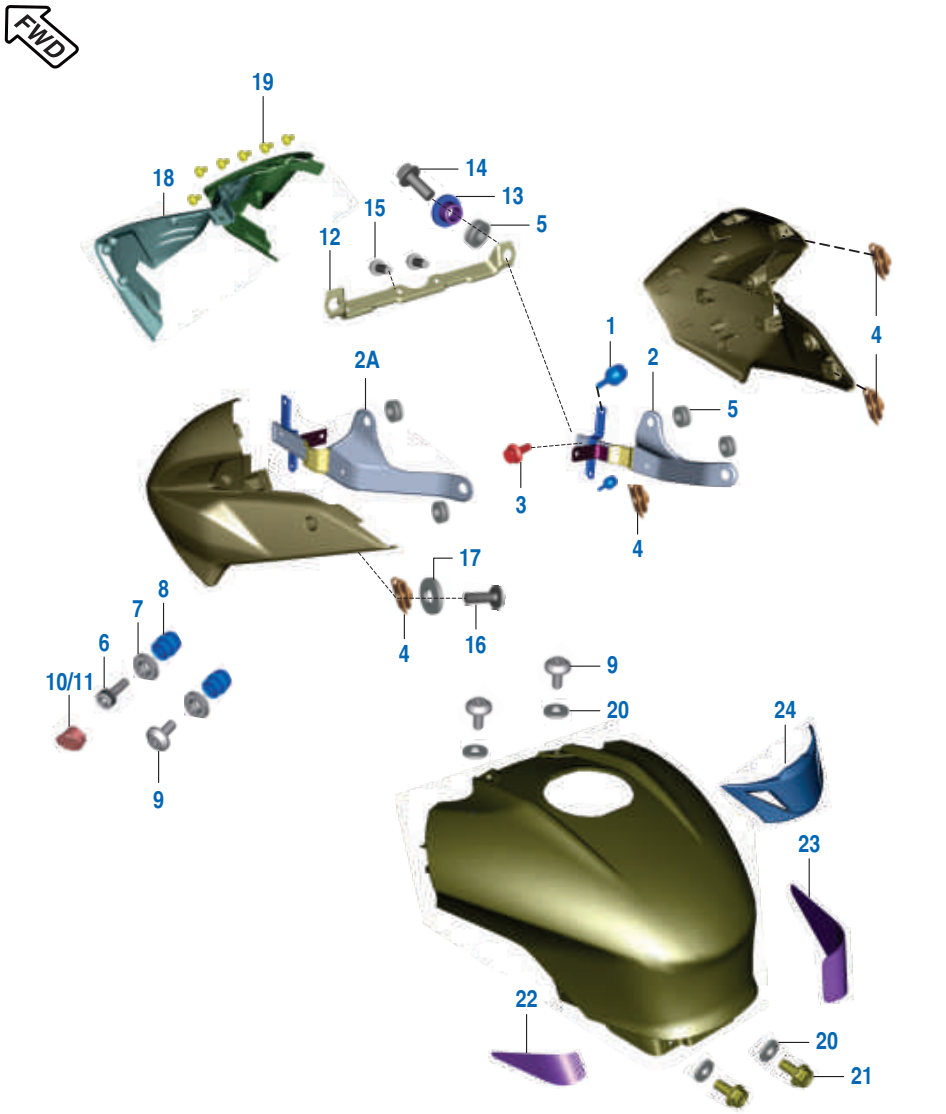

No.	Part No.	Description	Qty. 150 NS	Qty. AS 150	Remarks
1	JL 1710 57	Damper	4	--	
2	JF 1710 04	Bracket Side Cover Mtg RH	1	--	
2A	JF 1710 09	Bracket Side Cover Mtg LH	1	--	
3	KA DB05 16	Bolt - Flanged	4	--	
4	DJ 1612 29	Clip Nut	16	--	
5	JL 1710 24	Damper Structure Mtg	6	--	
6	KA CA06 20	Bolt Socket	2	--	
7	JL 1710 70	Tank Cover Grommet	4	--	
8	JL 1710 71	Tank Cover Mtg Sleeve	4	--	
9	LA C000 22	Bolt Socket-Special Head	4	--	
10	JL 1710 62	Cover Mesh Rh	1	--	
11	JL 1710 61	Cover Mesh LH	1	--	
12	JF 1138 09	Bkt Side Cover Mtg Center	1	--	
13	JL 1710 40	Sleeve	2	--	
14	39 1944 04	Bolt Flanged	2	--	
15	KA DM06 10	Bolt Flanged	2	--	
16	KB UB05 16	Screw	8	--	
17	39 2141 24	Washer (Non Metallic)	8	--	
18	JL 1710 48	Tank Cover Central	1	--	
19	39 1778 02	Screw - Tapping : 4 X 14	12	--	
20	31 1610 78	Washer	4	--	
21	KA DA05 12	Bolt Flanged	2	--	
22	JL 1910 08	Seat Tape LH	1	--	
23	JL 1910 09	Seat Tape RH	1	--	
24	JL 1710 78	Pad Tank Cover	1	1	

FWD Front Wheel Direction

Plate No.: 41

Brand ID: 001MC626 - NS 150 (JF02)
Brand ID: 001MC685 - AS 150 (JF05)

Fittings - Fairing & Tank Cover - Pulsar AS 150

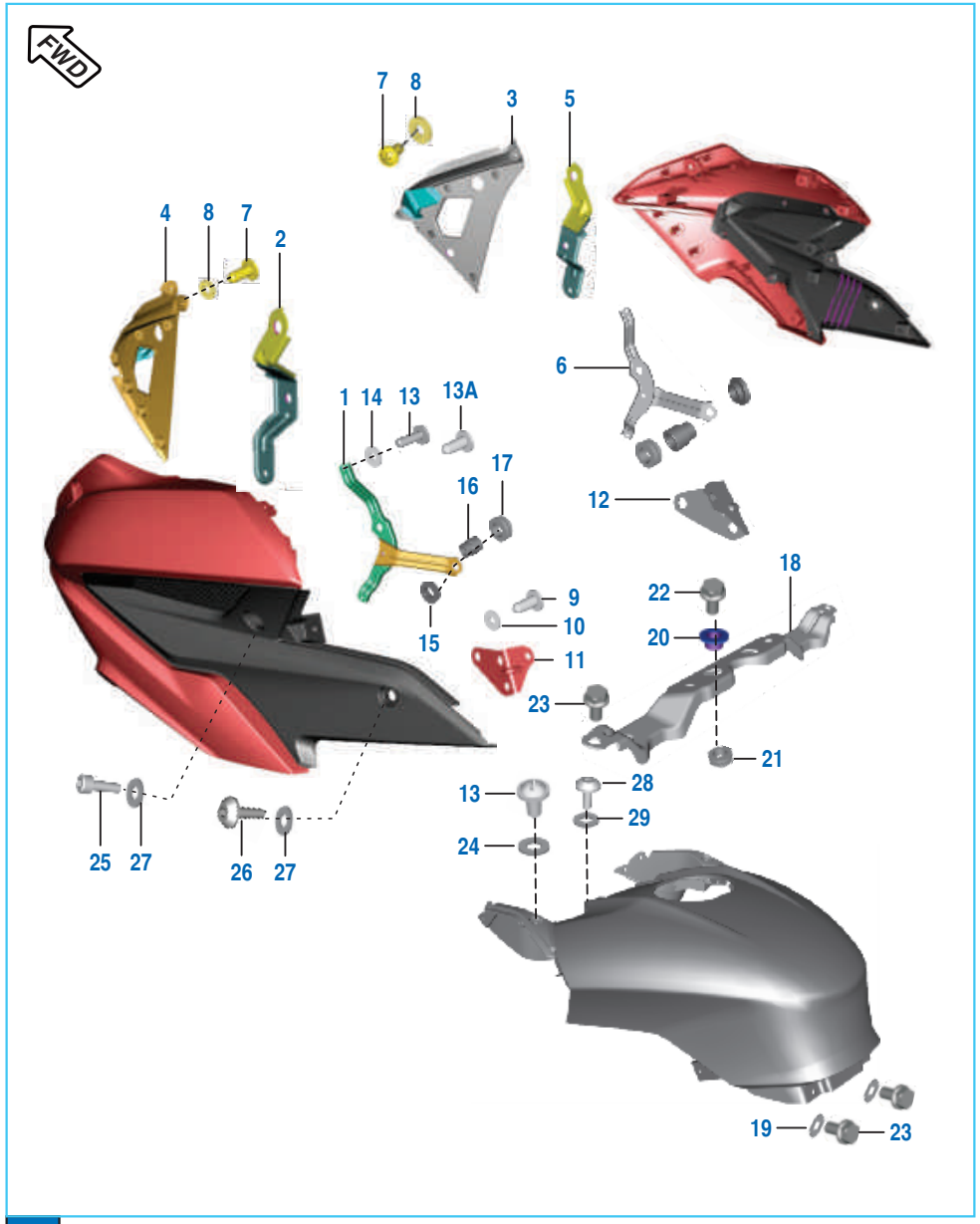

No.	Part No.	Description	Qty. 150 NS	Qty. AS 150	Remarks
1	JL 1814 49	Bracket Faring Mounting LH	--	1	
2	JL 1814 47	Bracket Blinker Mounting LH	--	1	
3	JL 1814 44	Sub Assly Side Fairing RH	--	1	
4	JL 1814 43	Sub Assly Side Fairing LH	--	1	
5	JL 1814 48	Bracket Blinker Mounting RH	--	1	
6	JL 1814 50	Bracket Faring Mounting RH	--	1	
7	39 1778 02	Screw	--	12	
8	KD AA04 08	Washer Plain	--	12	
9	LB R000 02	Screw Self Tapping	--	6	
10	KD BA05 12	Washer Plain	--	6	
11	JL 1814 56	Bracket Side Fairing Mtg LH	--	1	
12	JL 1814 57	Bracket Side Fairing Mtg RH	--	1	
13	DT 1810 10	Bolt Socket Head	--	2	
13A	KB UC05 14	Screw Truss	--	7	
14	KD BA05 12	Washer Plain	--	3	
15	JL 1710 70	Tank Cover Grommet	--	2	
16	JL 1710 71	Tank Cover Mtg Sleeve	--	2	
17	JL 1710 24	Damper Structure Mtg	--	2	
18	JL 1814 32	Fairing Mtg Bkt Middle	--	1	
19	39 2141 24	Washer	--	2	
20	JL 1710 40	Sleeve	--	2	
21	JL 1710 24	Damper	--	2	
22	KA DA06 30	Bolt Flanged	--	2	
23	KA DA05 12	Bolt Flanged	--	4	
24	KD BB05 12	Washer	--	2	
25	LA C000 63	Bolt Socket	--	2	
26	LA C000 34	Bolt M6	--	2	
27	LD B000 23	Washer Plain	--	4	
28	LA C000 22	Bolt Socket Head	--	2	
29	31 1610 78	Washer Nyloc	--	2	

FWD Front Wheel Direction

Plate No.: 42

Brand ID: 001MC626 - NS 150 (JF02)
Brand ID: 001MC685 - AS 150 (JF05)

Fittings - Side Cover & Seat Cowl

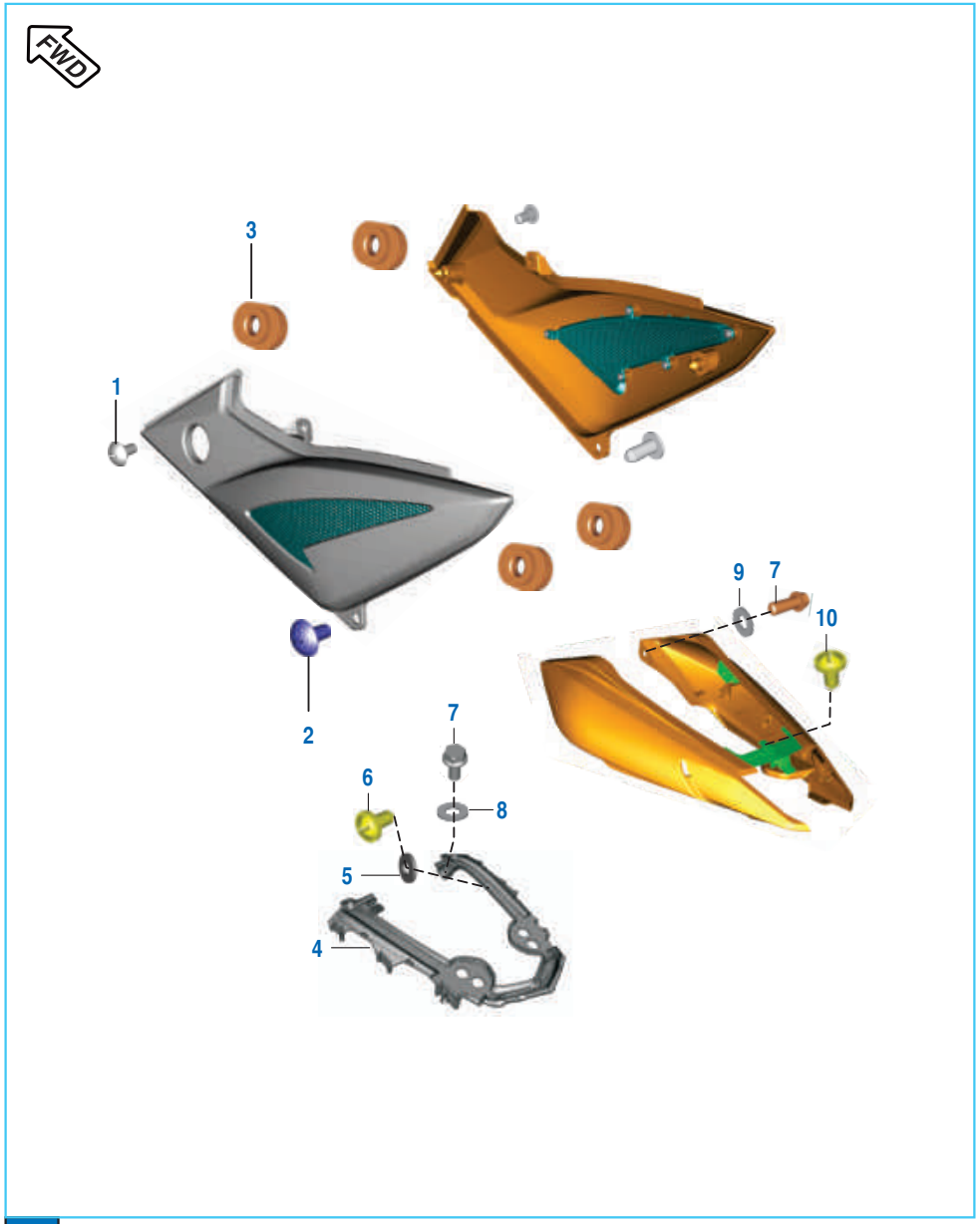

No.	Part No.	Description	Qty. 150 NS	Qty. AS 150	Remarks
1	JL 1812 88	Step Screw	2	2	
2	KB UA06 12	Screw Truss	2	2	
3	DS 1410 12	Grommet Side Cover	4	4	
4	JL 1812 14	Seal cowl inner	1	1	
5	LD A000 07	Washer Plain Small	4	4	
6	39 1776 02	Screw	4	--	
	KB RD42 13	Screw	--	4	
7	KA DF06 14	Bolt Flanged	4	4	
8	LD B000 23	Washer Plain	2	2	
9	39 0722 11	Washer Plain	2	2	
10	LB U000 23	Screw	1	1	

FWD Front Wheel Direction

Plate No.: 43

Brand ID: 001MC626 - NS 150 (JF02)
Brand ID: 001MC685 - AS 150 (JF05)

Meter Assembly

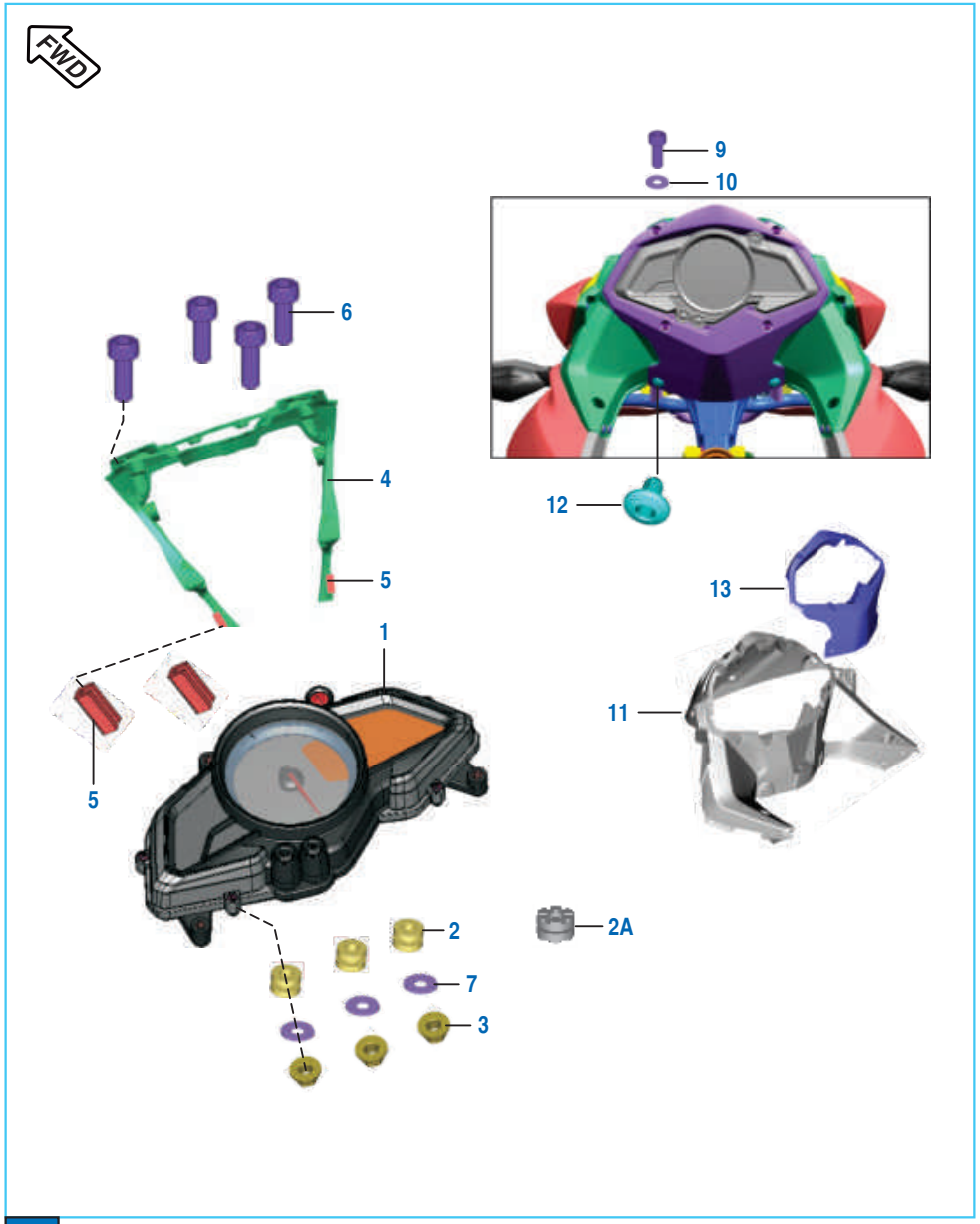

No.	Part No.	Description	Qty. 150 NS	Qty. AS 150	Remarks
1	JF 4024 00	Speedometer Assembly	1	1	
2	JG 1812 38	Grommet Dashboard	3	--	
2A	JL 1813 04	Grommet	--	3	
3	KC AA05 04	Nut Hex Thick	3	3	
4	JL 1812 41	Assembly Speedo Flap	1	--	
5	JB 1812 23	Beading Speedo Flap	2	2	
6	KA CH05 14	Bolt-Socket	4	4	
7	LD B000 07	Washer Plain	3	3	
8	JL 4024 03	Speedometer Harness	1	1	N.I.
9	JL 1810 25	Bolt-Socket	--	4	
10	KD AA05 10	Washer Plain	--	4	
11	JL 1814 37	Speedo Flap	--	1	
12	JG 1812 59	Rivet Snap	--	4	
13	JL 1814 37	Canopy Speedo Flap	--	1	

FWD Front Wheel Direction

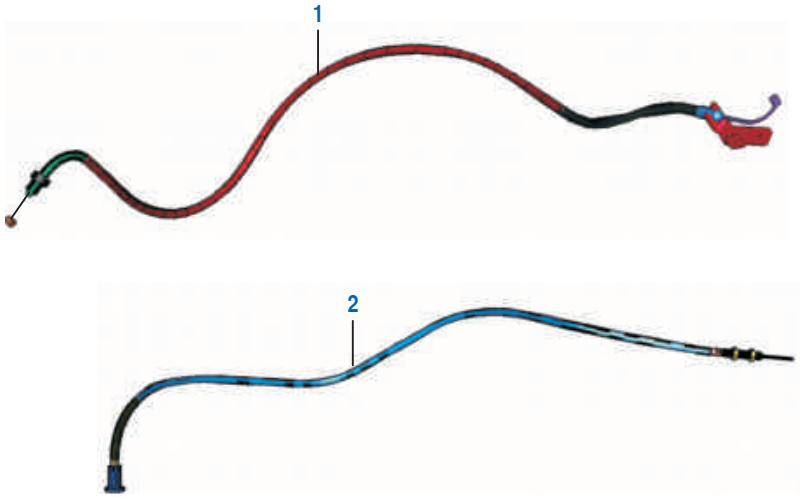

Front Wheel Direction

Plate No.: 44

Control Cables

No.	Part No.	Description	Qty. 150 NS	Qty. AS 150	Remarks
1	JF 1612 02	Cable Throttle	1	--	
	JF 1612 06	Cable Throttle	--	1	
2	JF 1612 01	Cable Clutch	1	1	
3	DH 2010 79	Speed Sensor Cable with Case	1	--	N.I.
	DH 2010 80	Speed Sensor Cable	1	--	
	JF 4024 05	Speed Sensor with Case	--	1	N.I.
	JF 4024 04	Speed Sensor Cable	--	1	N.I.

Plate No.: 45

Brand ID: 001MC626 - NS 150 (JF02)
Brand ID: 001MC685 - AS 150 (JF05)

Chain Case

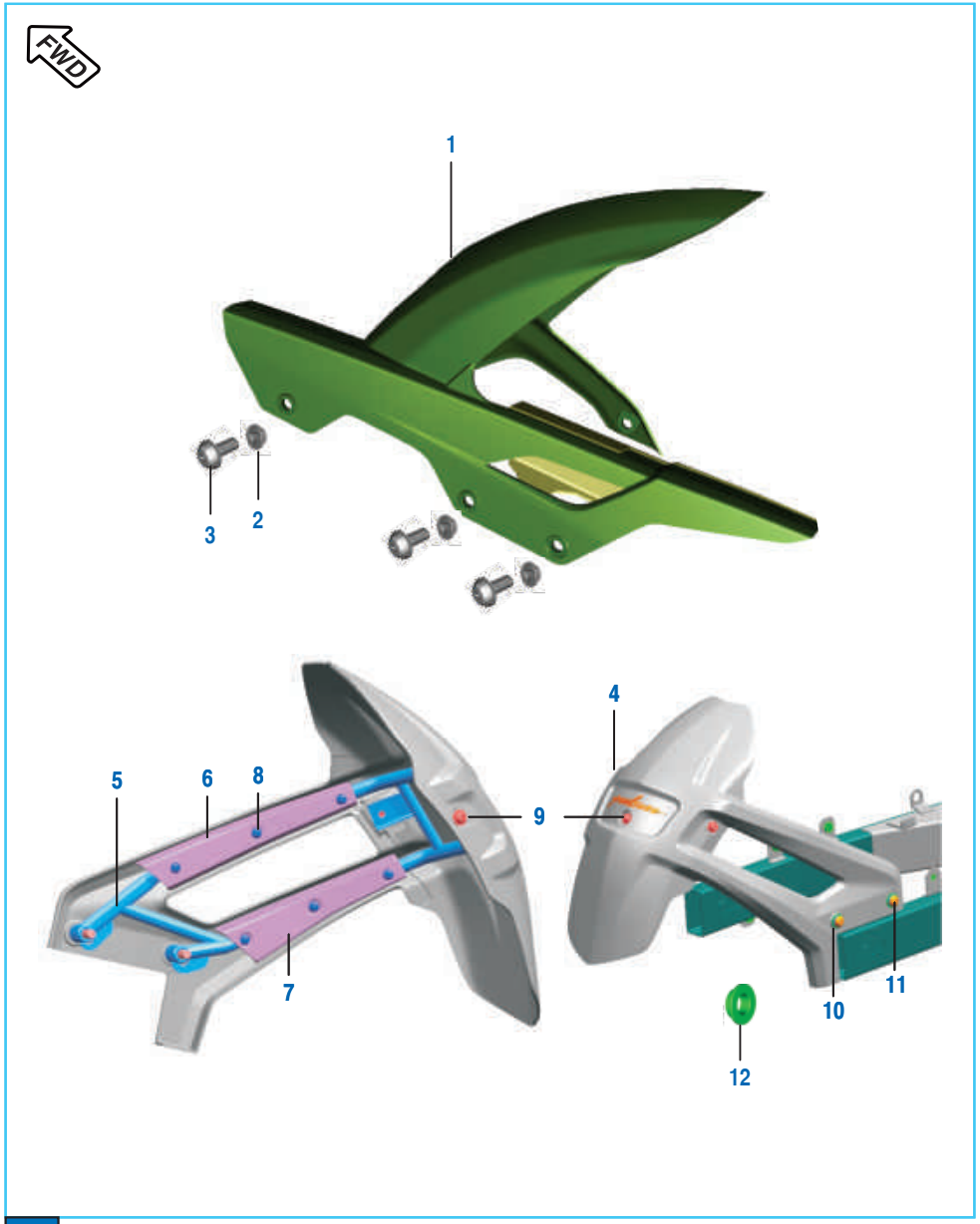

No.	Part No.	Description	Qty. 150 NS	Qty. AS 150	Remarks
1	JF 1812 11	Cover Assly Chain	1	1	
2	JL 1812 97	Collar	7	7	
3	LA C000 54	Bolt	7	7	
4	JF 1814 09	Hugger Rear	1	--	
5	JF 1810 05	Tube Rear Hugger Mtg	1	--	
6	JL 1814 07	Cover 1- Hugger Rear	1	--	
7	JL 1814 08	Cover 2- Hugger Rear	1	--	
8	KB UB04 10	Screw	6	--	
9	LA C000 37	Bolt Soc-special Head	3	--	
10	39 0265 12	Spring Washer	2	--	
11	LA C000 36	Bolt Special Socket	2	--	
12	JL 1814 10	Collar Hugger Rear	2	--	

FWD Front Wheel Direction

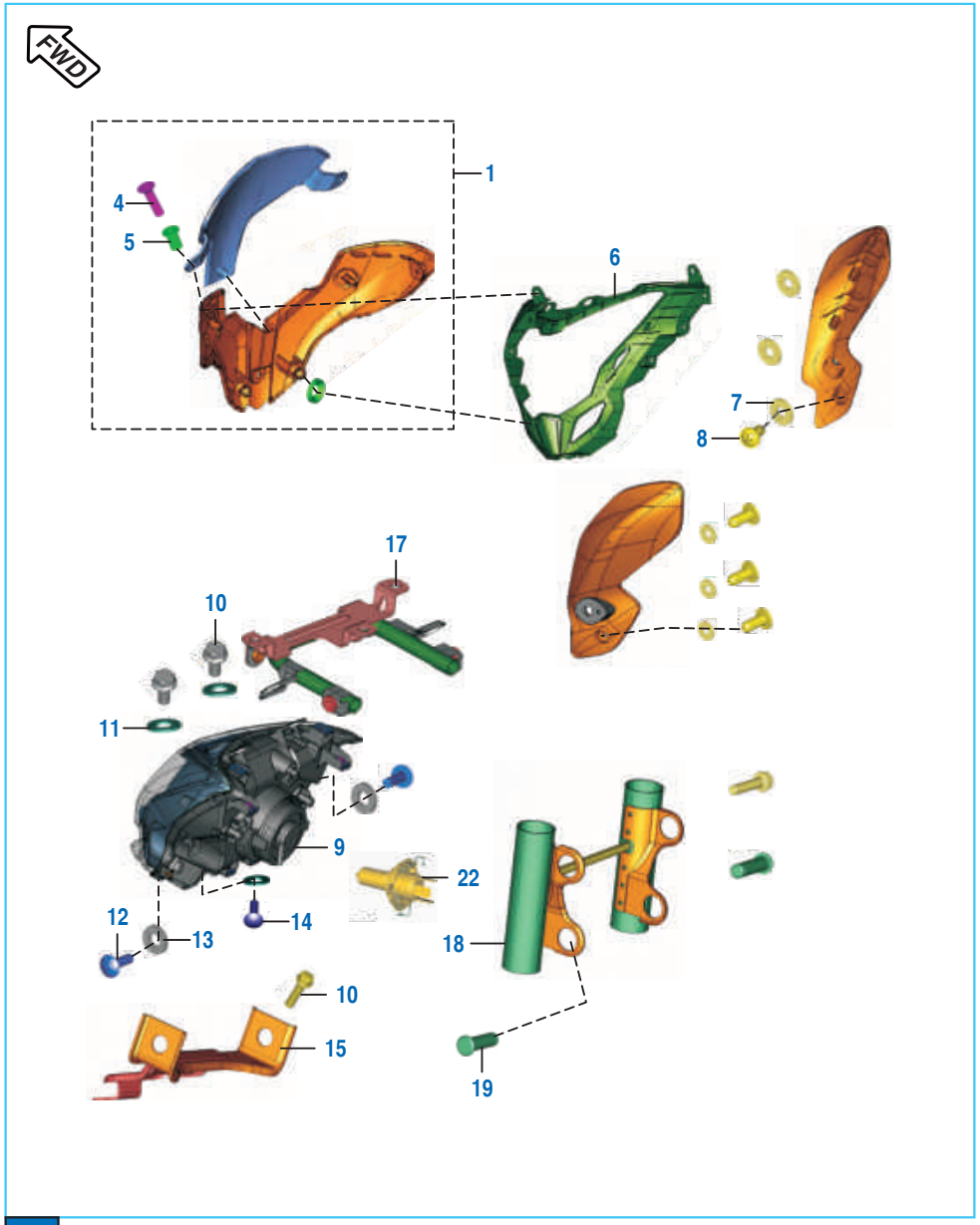

Front Wheel Direction

Plate No.: 46

Brand ID: 001MC626 - NS 150 (JF02)
Brand ID: 001MC685 - AS 150 (JF05)

Head Lamp & Fairing - Pulsar 150 NS

No.	Part No.	Description	Qty. 150 NS	Qty. AS 150	Remarks
1	JL 1810 08	Windshield Assembly	1	--	
2	JG 1812 36	Well Nut - M5 X 16 L	2	--	N.I.
3	JG 1812 35	Washer Special	2	--	N.I.
4	LB S000 02	Screw CSK - Socket	2	--	
5	JL 1812 47	Grommet Wind Screen Mtg	2	--	
6	JL 1812 03	Fairing	1	--	
7	LD A000 07	Washer Plain Small	6	--	
	KD BA05 12	Washer Plain	6	--	
8	LB R000 02	Self Tapping Screw - Dia 5	6	--	
9	JF 4010 17	Head Lamp Assy	1	--	
		Head Lamp W/O Bulb	1	--	
10	39 1943 04	Bolt - Flanged	2	--	
11	39 0198 11	Washer - Plain	3	--	
12	KB UA05 16	Screw Truss	2	--	
13	39 2141 24	Washer (Non Metallic Round Washer)	2	--	
14	KB UA06 16	Round Head Screw	1	--	
15	JL 1812 36	Bracket Lower Mtg	1	--	
16	JL 1812 49	Damper Head Lamp	1	--	N.I.
17	JL 1812 37	Bracket Upper Mtg	1	--	
18	JL 1812 35	Lamp Shade assly.	1	--	
19	KA CB08 35	Bolt Pivot Mass Carrier	4	--	or
	KA CH05 14	Bolt Socket	4	--	
20	YJ L020 06	Harness Head Lamp	1	--	
21	DK 2010 44	Bulb-Pilot (12V, W5W)	2	--	N.I.
22	EC 4010 30	Head Lamp Bulb 60/55W (H4)	1	--	
23	PA 1812 92	Grommet Fairing	4	--	
24	PA 1812 93	Collar Fairing Mtg	4	--	

Plate No.: 47

Brand ID: 001MC626 - NS 150 (JF02)
Brand ID: 001MC685 - AS 150 (JF05)

Head Lamp & Fairing Structure - Pulsar AS 150

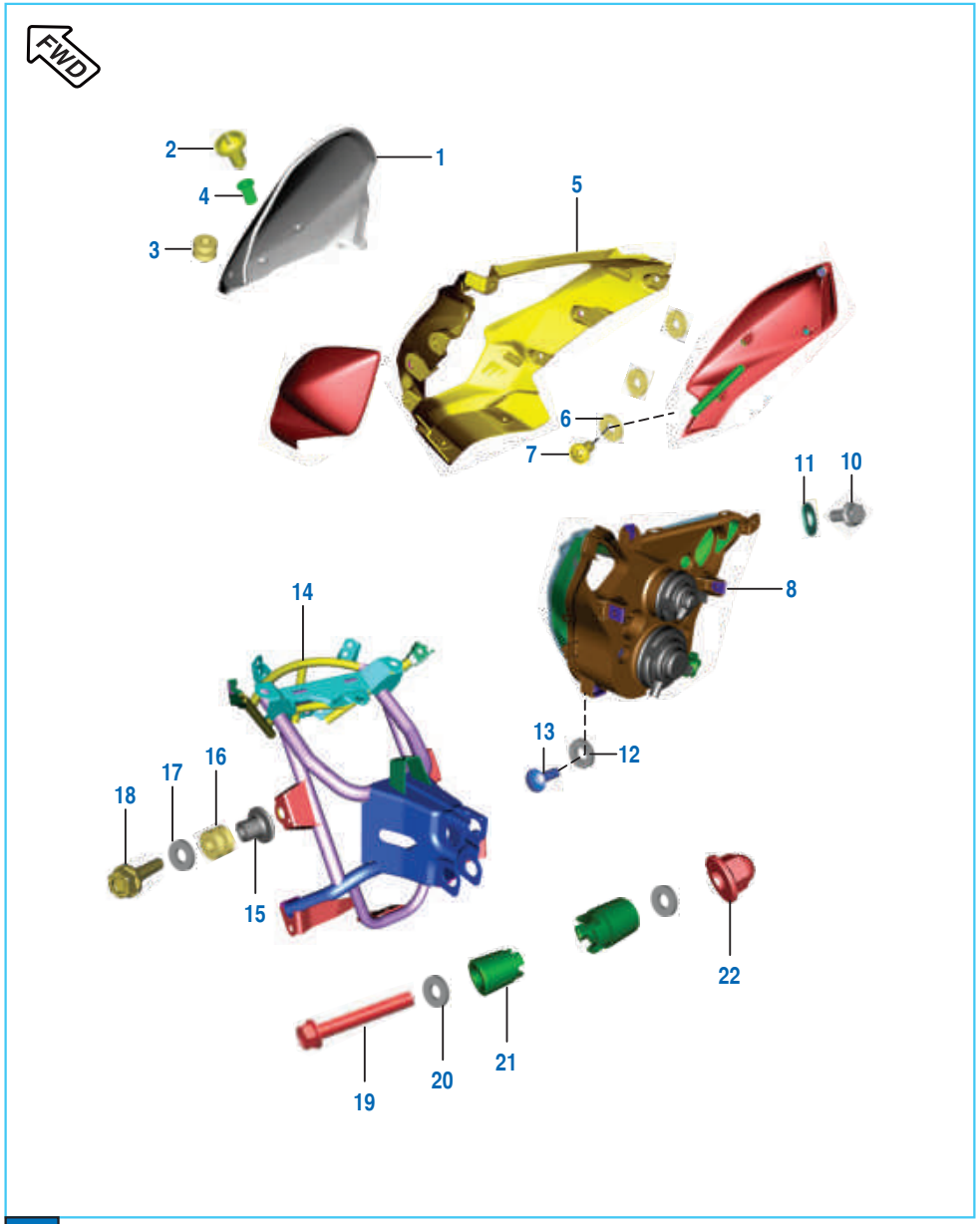

No.	Part No.	Description	Qty. 150 NS	Qty. AS 150	Remarks
1	JL 1814 26	Windshield	--	1	
2	LB U000 30	Screw Truss	--	6	
3	JL 1812 45	Grommet	--	6	
4	JL 1814 53	Collar Wind Screen Mtg	--	6	
5	JL 1814 17	Mask	--	1	
6	KD BA05 12	Washer Plain	--	6	
7	LB R000 02	Self Tapping Screw - Dia 5	--	6	
8	JL 4010 17	Head Lamp Assy	--	1	
		Head Lamp W/O Bulb	--	1	
9	EC 4010 30	Head Lamp Bulb 60/55W (H4)	1	1	
10	KA DB06 16	Bolt - Flanged	--	1	
11	KD BA06 13	Washer - Plain	--	1	
12	JY 1812 84	Washer	--	2	
13	KB UB06 25	Screw	--	2	
14	JL 1814 16	Fairing Structure	--	1	
15	DJ 1810 29	Collar Fairing	--	3	
16	DJ 1810 64	Grommet	--	3	
17	39 0211 11	Washer Plain	--	3	
18	KA EG06 20	Bolt Flanged	--	3	
19	LA D001 20	Bolt Flanged	--	2	
20	DT 1813 10	Hex Thrust Washer	--	4	
21	DT 1813 11	Spacer Fairing Structure	--	4	
22	39 2535 15	Nut Dome Cap	--	2	

FWD Front Wheel Direction

Plate No.: 48

Brand ID: 001MC626 - NS 150 (JF02)
Brand ID: 001MC685 - AS 150 (JF05)

Indicator Light Assembly

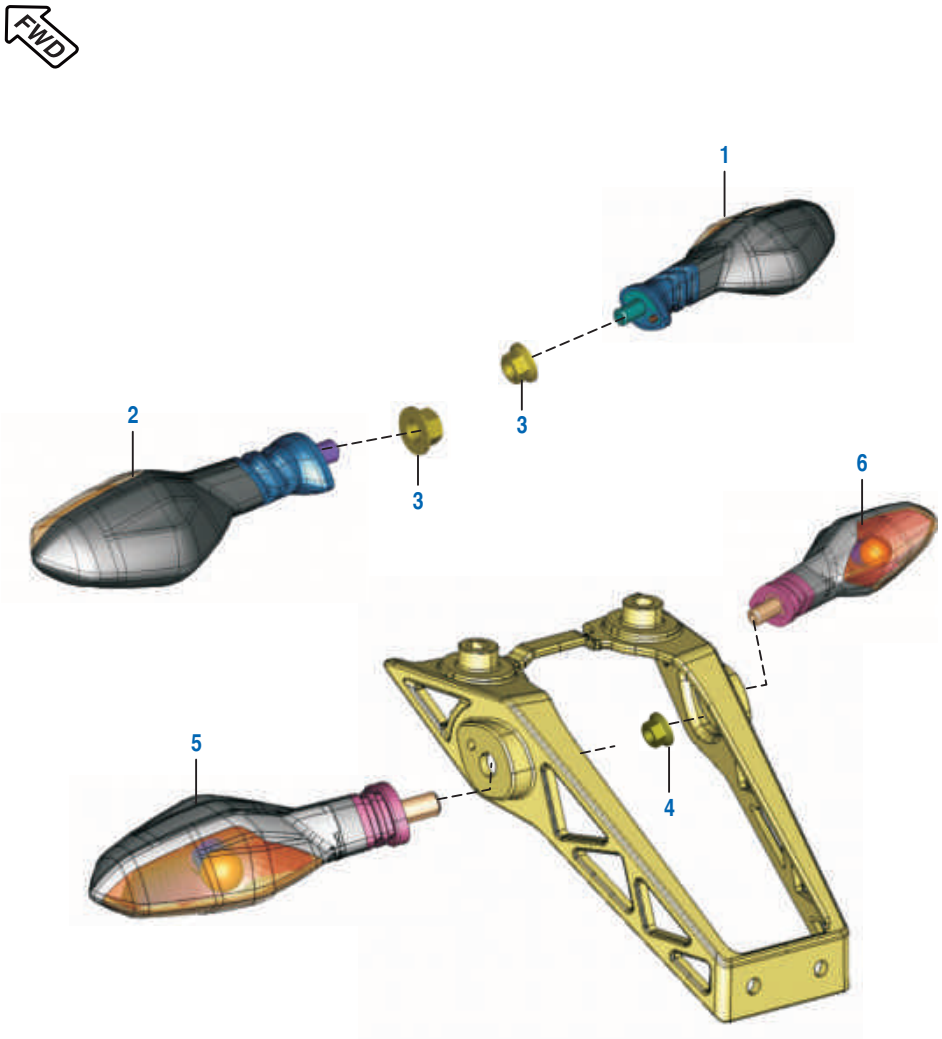

No.	Part No.	Description	Qty. 150 NS	Qty. AS 150	Remarks
1	JL 4010 06	Indicator Assy Front RH	1	1	
2	JL 4010 05	Indicator Assy Front LH	1	1	
3	39 1225 15	Nut-Hexagon with Flange:M10	2	2	
4	KC GD10 10	Nut	2	2	
5	JL 4010 03	Indicator Assy Rear LH	1	1	
6	JL 4010 04	Indicator Assy Rear RH	1	1	

FWD Front Wheel Direction

Plate No.: 49

Brand ID: 001MC626 - NS 150 (JF02)
Brand ID: 001MC685 - AS 150 (JF05)

Number Plate / Tail Lamp Assly - Pulsar 150 NS

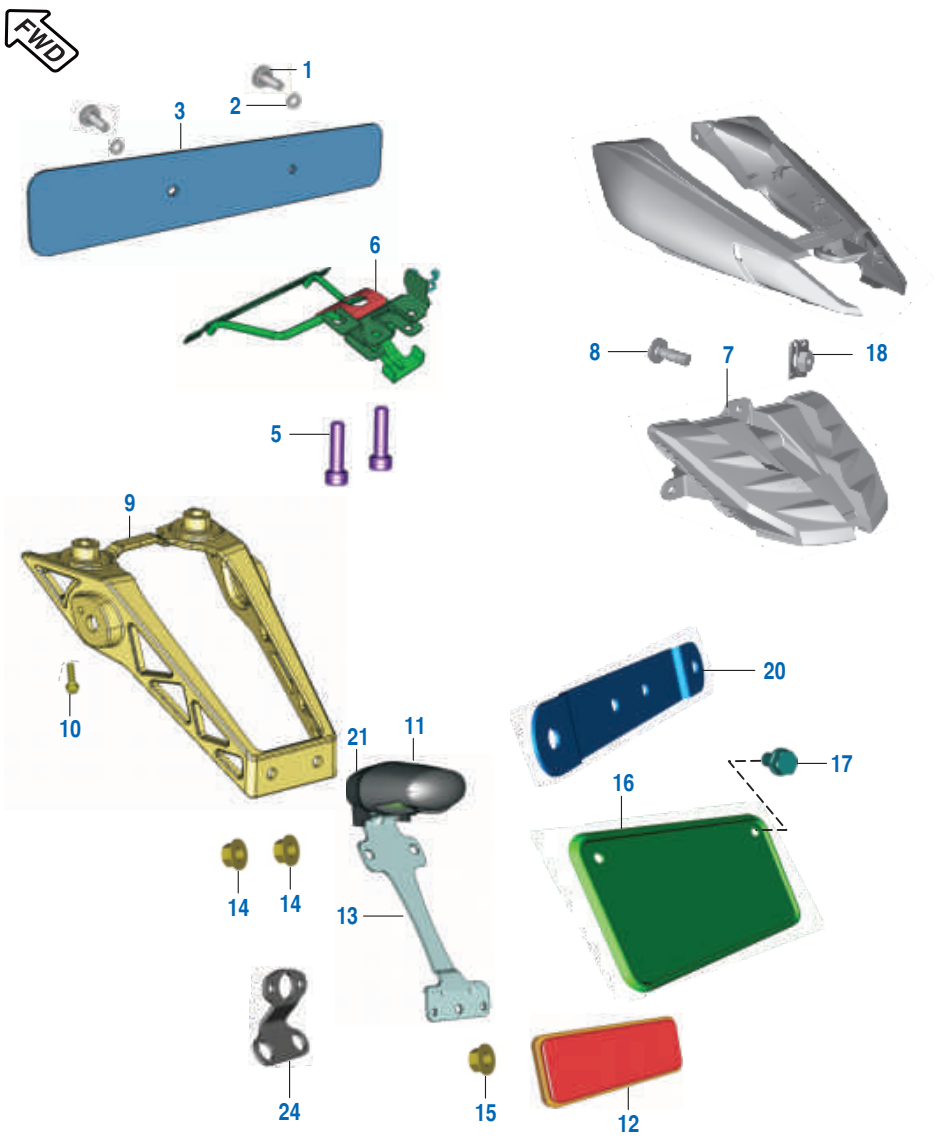

No.	Part No.	Description	Qty. 150 NS	Qty. AS 150	Remarks
1	LB U000 09	Screw Mashroom Head	2	--	
2	39 2141 24	Washer None Metallic	2	--	
3	JU 2328 00	Front Number Plate	1	--	
4	LC A000 08	Flange Nut	2	--	
5	KA CB08 30	Hex Flanged Bolt	2	--	
6	JL 2328 05	Bracket Number Plate Mtg	1	--	
7	JL 4010 02	Lamp Tail Assly	1	--	
8	39 1907 01	Screw - Truss Cross : M5	3	--	
9	56 JL02 3G	Blinker Bkt Moon Light Silver	1	--	
10	KA DD08 25	Bolt Flanged	2	--	
11	JD 4010 07	Rear Number Plate Lamp	1	--	
12	DD 2010 02	Reflector - Reflex	1	--	
13	JL 1138 03	Bracket -Reflector Reflex Mtg	1	--	
14	KC GD06 06	Nut Hex	2	--	
15	KC GD05 05	Nut Hex	1	--	
16	DP 1611 45	Rear Number Plate	1	--	
17	KA DD06 10	Bolt-Hexagon Head	2	--	
18	DJ 1612 29	Nut Clip	3	--	
19	PA 4022 04	Band (Length 110Mm)	2	--	N.I.
20	JL 2328 08	Bracket Rr Number Plate Mtg	1	--	
21	JL 4010 16	Cover Number Plate Lamp	1	--	
22	JL 1138 11	Grommet - Illumination Bkt	2	--	N.I.
23	JL 1138 12	Sleeve - Illumination Bkt	2	--	N.I.
24	JL 1138 10	Bracket Illumisation Lamp	1	--	

FWD Front Wheel Direction

Plate No.: 50

Brand ID: 001MC626 - NS 150 (JF02)
Brand ID: 001MC685 - AS 150 (JF05)

Number Plate / Tail Lamp Assly - Pulsar AS 150

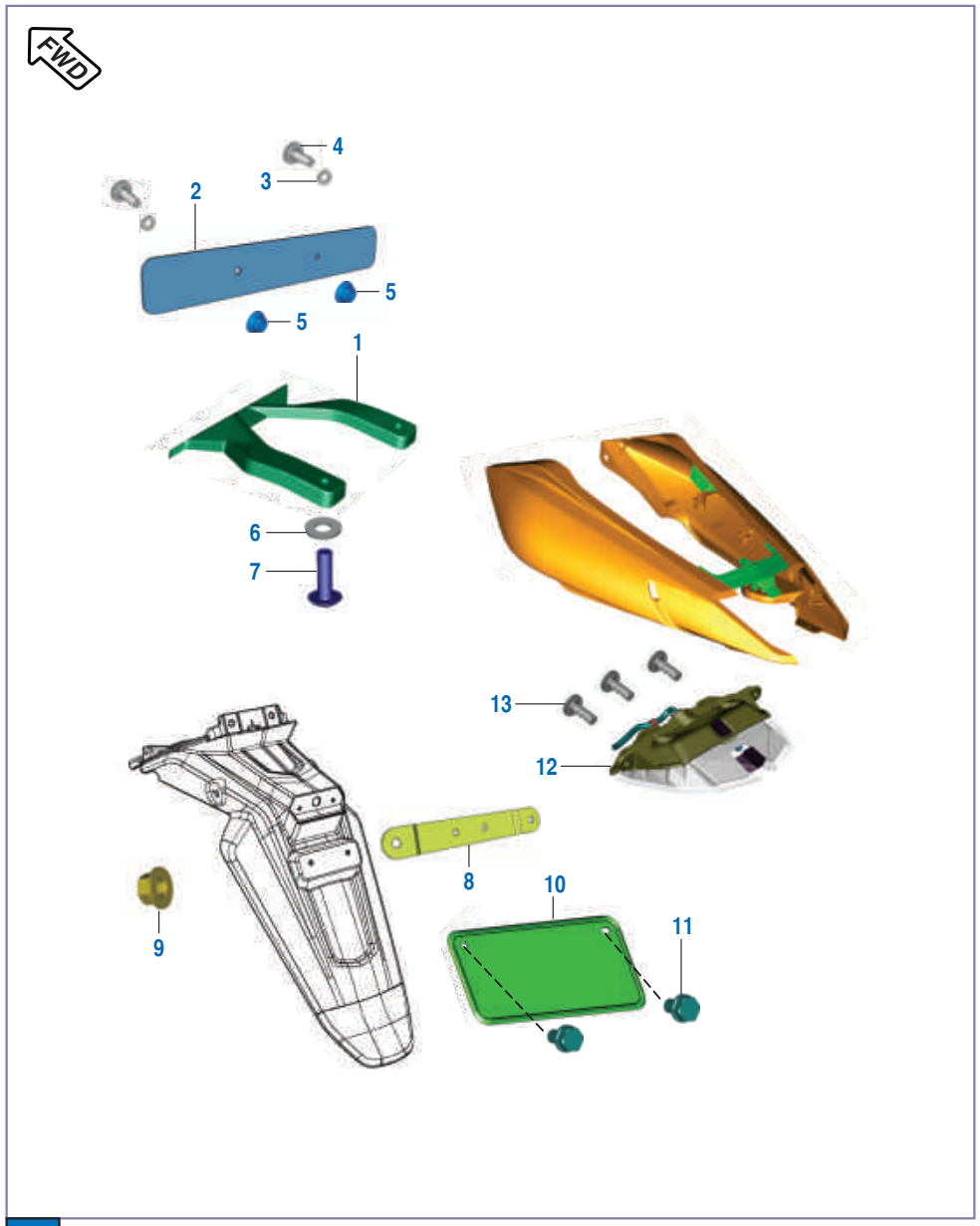

No.	Part No.	Description	Qty. 150 NS	Qty. AS 150	Remarks
1	JL 2328 10	Bracket No Plate Front	--	1	
2	JU 2328 00	No Plate Front	--	1	
3	39 2141 24	Washer None Metallic	--	2	
4	KB BA05 14	Screw Pan Cross	--	2	
5	KC GA05 05	Nut Hex	--	2	
6	JY 1812 84	Washer Nylon	--	2	
7	KB UC06 25	Screw Truss	--	2	
8	JL 2328 11	Bracket No. Plate Mtg	--	1	
9	LC G000 08	Nut Flanged	--	2	
10	DP 1611 45	Number Plate Rear	--	1	
11	KA DD06 10	Bolt Flanged	--	2	
12	JL 4010 02	Tail Lamp	--	1	
13	39 1907 01	Screw	--	3	

FWD Front Wheel Direction

Plate No.: 51

Brand ID: 001MC626 - NS 150 (JF02)
Brand ID: 001MC685 - AS 150 (JF05)

Electrical Equipments

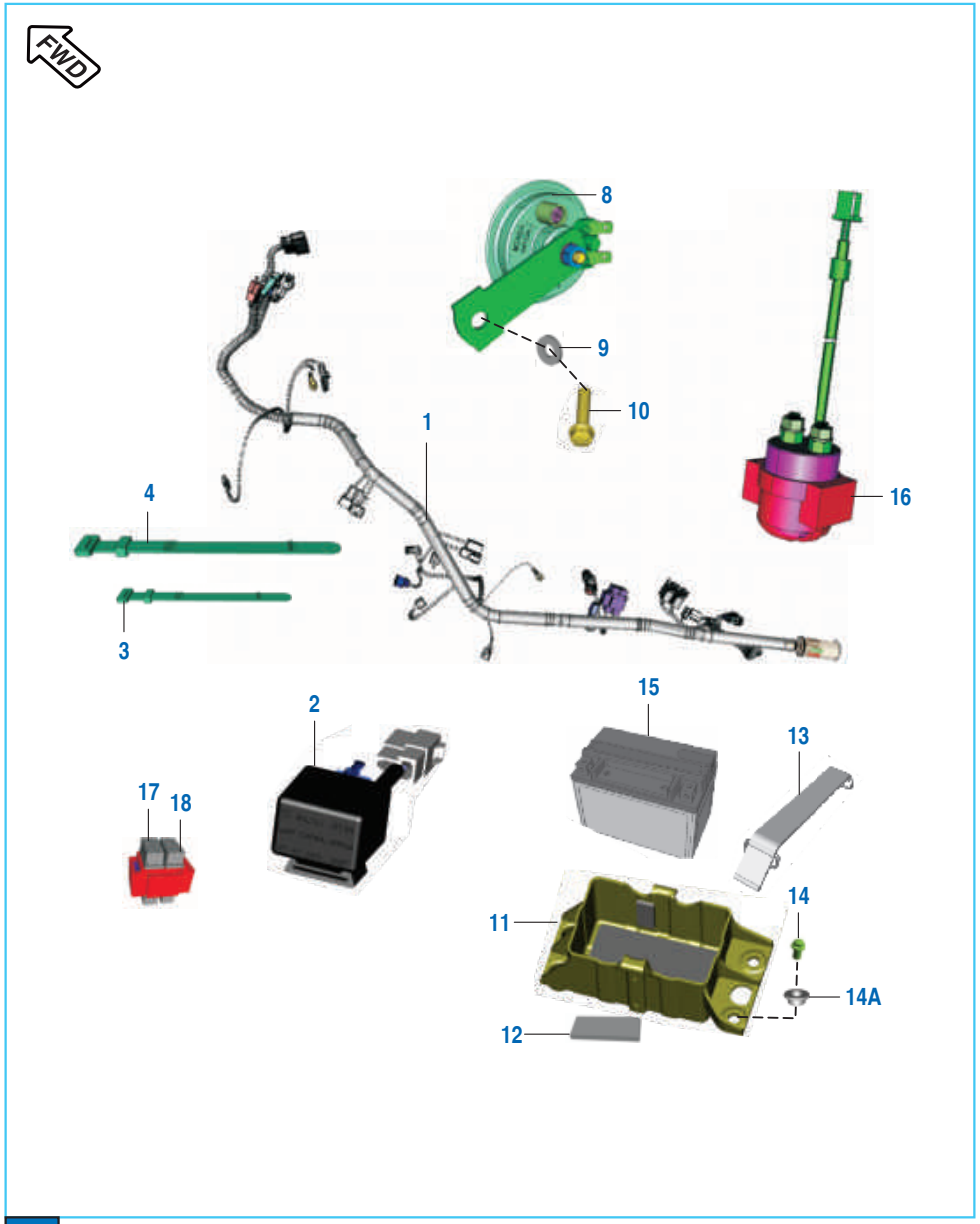

No.	Part No.	Description	Qty. 150 NS	Qty. AS 150	Remarks
1	JF 4022 03	Harness Wiring	1	--	
	JF 4022 09	Harness Wiring	--	1	
2	DT 4020 06	Light Control Module	1	1	
3	30 1910 48	Band (123 mm)	5	5	
4	30 2010 64	Band (149 mm)	3	3	
5	JL 4022 01	Cable Assy Relay To Motor	1	1	N.I.
6	JF 4022 01	Cable Earth	1	1	N.I.
7	JD 4022 17	Band (Length 150 mm)	2	2	N.I.
8	PA 4016 00	Horn	1	1	
9	39 1507 11	Washer - Plain	1	1	
10	39 2205 04	Hex Head Bolt - Flanged M8	1	1	
11	JF 1812 53	Battery Case Assly	1	1	
12	JG 4018 08	Foam Bottom Battery	12	12	
13	JF 4018 02	Battery Band	1	1	
14	KA EM06 14	Bolt - Flanged	4	4	
14A	JL 1812 64	Sleeve	4	4	
15	JF 4018 03	12V 4Ah VRLA Battery	1	1	
16	JN 3516 04	Starter Relay- With Grommet	1	1	
17	JL 4022 07	Fuse Box Assly with Fuse	1	1	
18	AP 2010 25	Fuse 15A (Blade Type)	2	2	
19	JD 4022 12	Band (Length 200 mm)	1	1	N.I.
20	PA 4022 04	Band (Length 110 mm)	2	2	N.I.

FWD Front Wheel Direction

Plate No.: 52

Tool Kit

No.	Part No.	Description	Qty. 150 NS	Qty. AS 150	Remarks
1	DJ 2210 19	Tool Kit	1	1	Not Serviceable
2	DK 2210 24	Band Tool Kit	2	2	

FWD Front Wheel Direction

Plate No.: 53

Brand ID: 001MC626 - NS 150 (JF02)
Brand ID: 001MC685 - AS 150 (JF05)

Accessories / Grab Handle

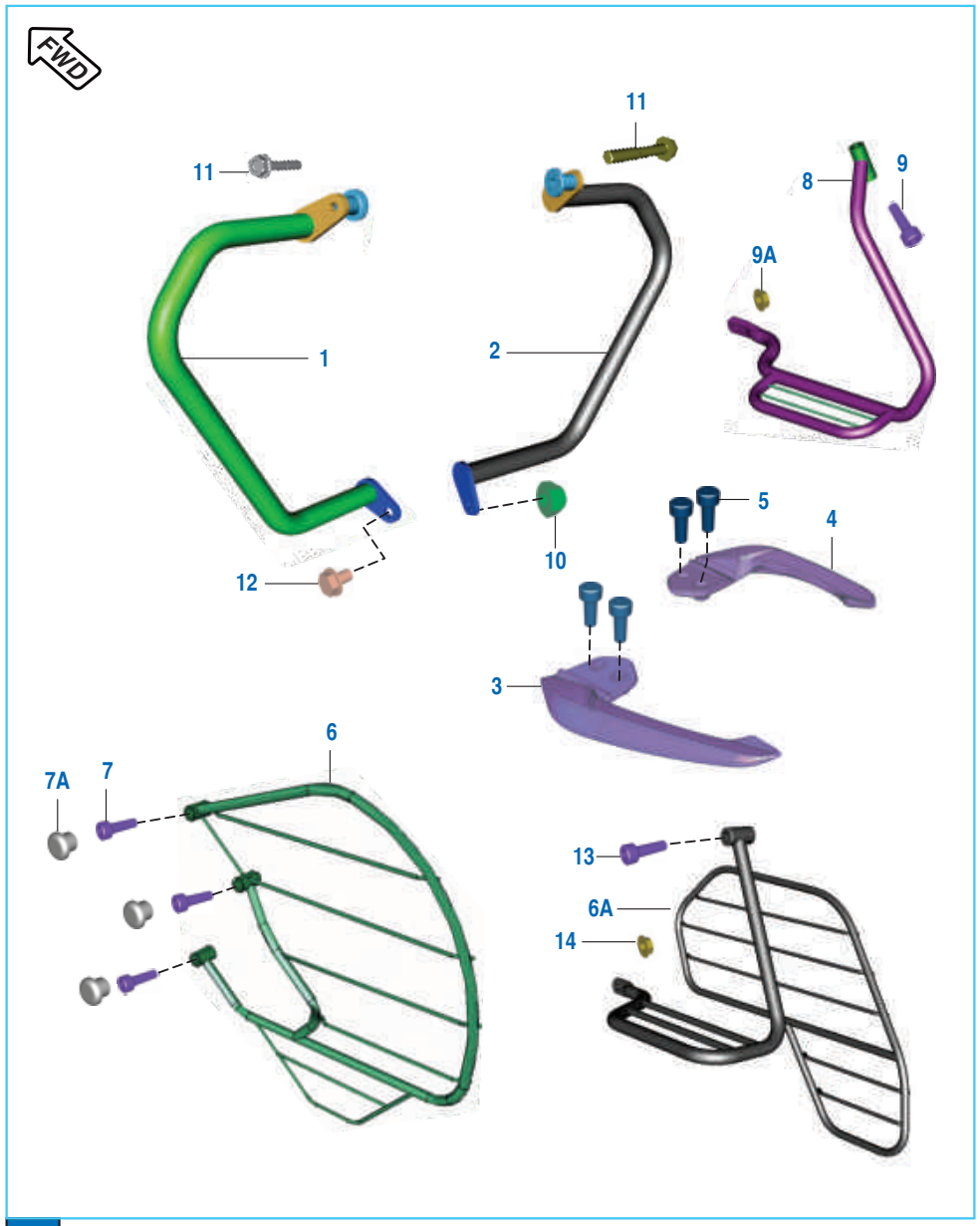

No.	Part No.	Description	Qty. 150 NS	Qty. AS 150	Remarks
1	JF 2312 01	Guard Leg LH	1	1	
2	JF 2312 02	Guard Leg Guard Rh	1	1	
3	JL 2314 04	Grab Handle Assy LH	1	1	
4	JL 2314 05	Grab Handle Assy RH	1	1	
5	LA C000 35	Bolt Socket	4	4	
6	JL 2312 02	Guard Saree	1	--	
6A	JF 2312 03	Guard Saree	--	1	
7	KA CB06 22	Bolt Socket L-22	3	--	
7A	JL 2312 09	Plug	3	--	
8	JL 2312 04	Ladies Foot Rest	1	--	
9	KA Cb08 30	Bolt	1	--	
9A	39 1225 15	Nut	1	--	
10	39 1970 15	Hex Nut	1	1	
11	KA DA06 40	Bolt Socket	2	2	
12	KA DF08 85	Bolt Flanged M6-6L	1	1	
13	KA CA08 50	Bolt	--	1	
14	39 1055 15	Nut	--	1	

FWD Front Wheel Direction

Plate No.: 54

Brand ID: 001MC626 - NS 150 (JF02)
Brand ID: 001MC685 - AS 150 (JF05)

Painted Parts and Decals- 150 NS

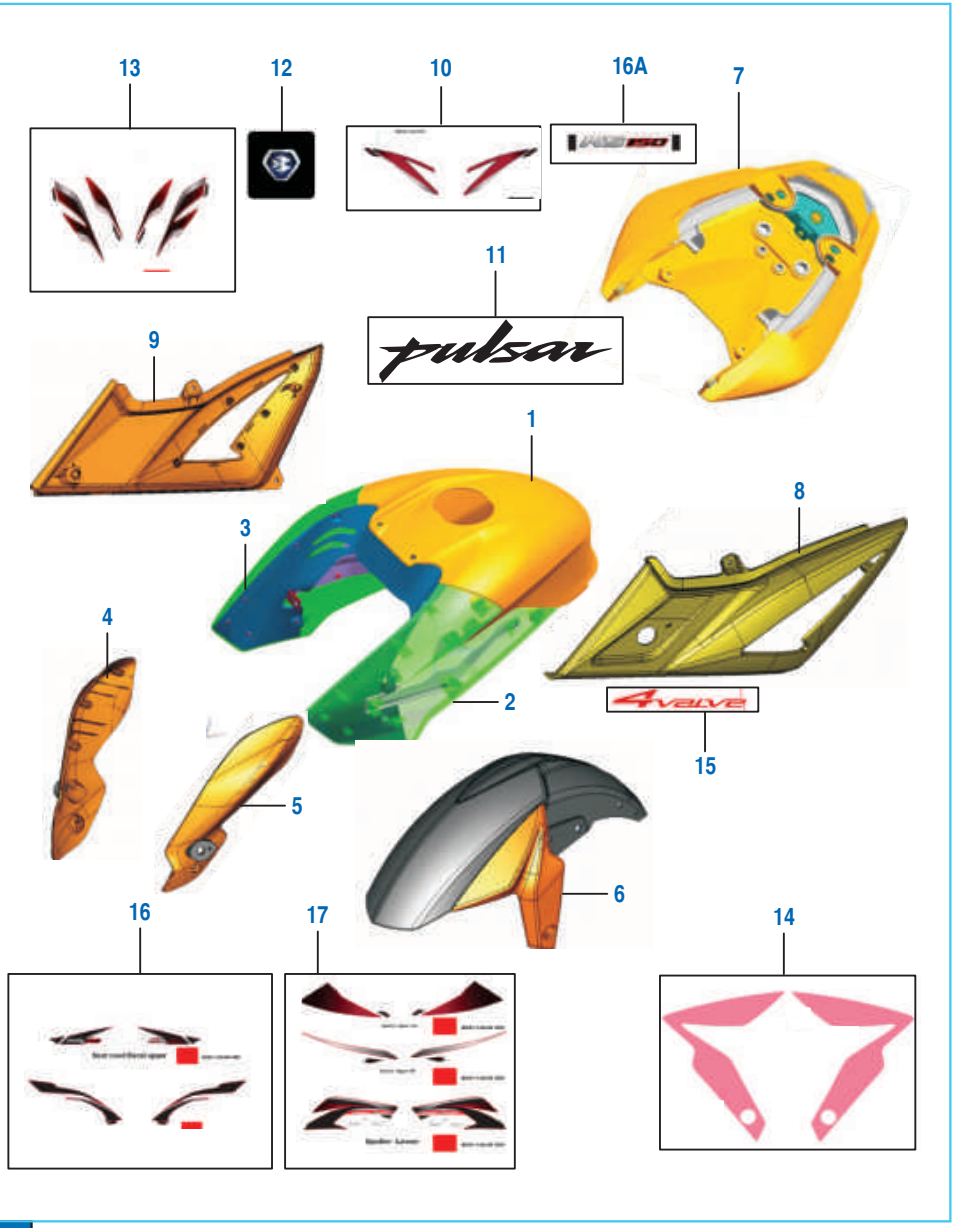

No.	Part No.	Description	Qty. 150 NS	Qty. AS 150	Remarks
1	JL 7401 5P	Tank Cover Top Blue	1	--	
	JL 7401 5N	Tank Cover Top Black	1	--	
	JL 7401 5M	Tank Cover Top Red	1	--	
	JL 7401 X3	Tank Cover Top Eb Black	1	--	
2	52 JF00 73	Tank Cover Side LH P Red	1	--	
	52 JF00 72	Tank Cover Side LH S Blue	1	--	
	52 JF00 74	Tank Cover Side LH E Black	1	--	
	52 JF00 75	Tank Cover Side LH M White	1	--	
3	52 JF00 77	Tank Cover Side RH P Red	1	--	
	52 JF00 78	Tank Cover Side RH E Black	1	--	
	52 JF00 76	Tank Cover Side RH S Blue	1	--	
	52 JF00 79	Tank Cover Side RH M White	1	--	
4	52 JL01 92	Side Mask RH E Black	1	--	
	52 JL01 94	Side Mask RH P Red	1	--	
	52 JL01 96	Side Mask RH S Blue	1	--	
	52 JL01 98	Side Mask RH M White	1	--	
5	52 JL01 91	Side Mask LH E Black	1	--	
	52 JL01 93	Side Mask LH P Red	1	--	
	52 JL01 95	Side Mask LH S Blue	1	--	
	52 JL01 97	Side Mask LH M White	1	--	
6	52 JF00 84	Front Fender Blue	1	--	
	52 JF00 86	Front Fender Black	1	--	
	52 JF00 85	Front Fender Red	1	--	
	52 JF00 87	Front Fender M White	1	--	

FWD Front Wheel Direction

Plate No.: 54

Brand ID: 001MC626 - NS 150 (JF02)
Brand ID: 001MC685 - AS 150 (JF05)

Painted Parts and Decals- 150 NS

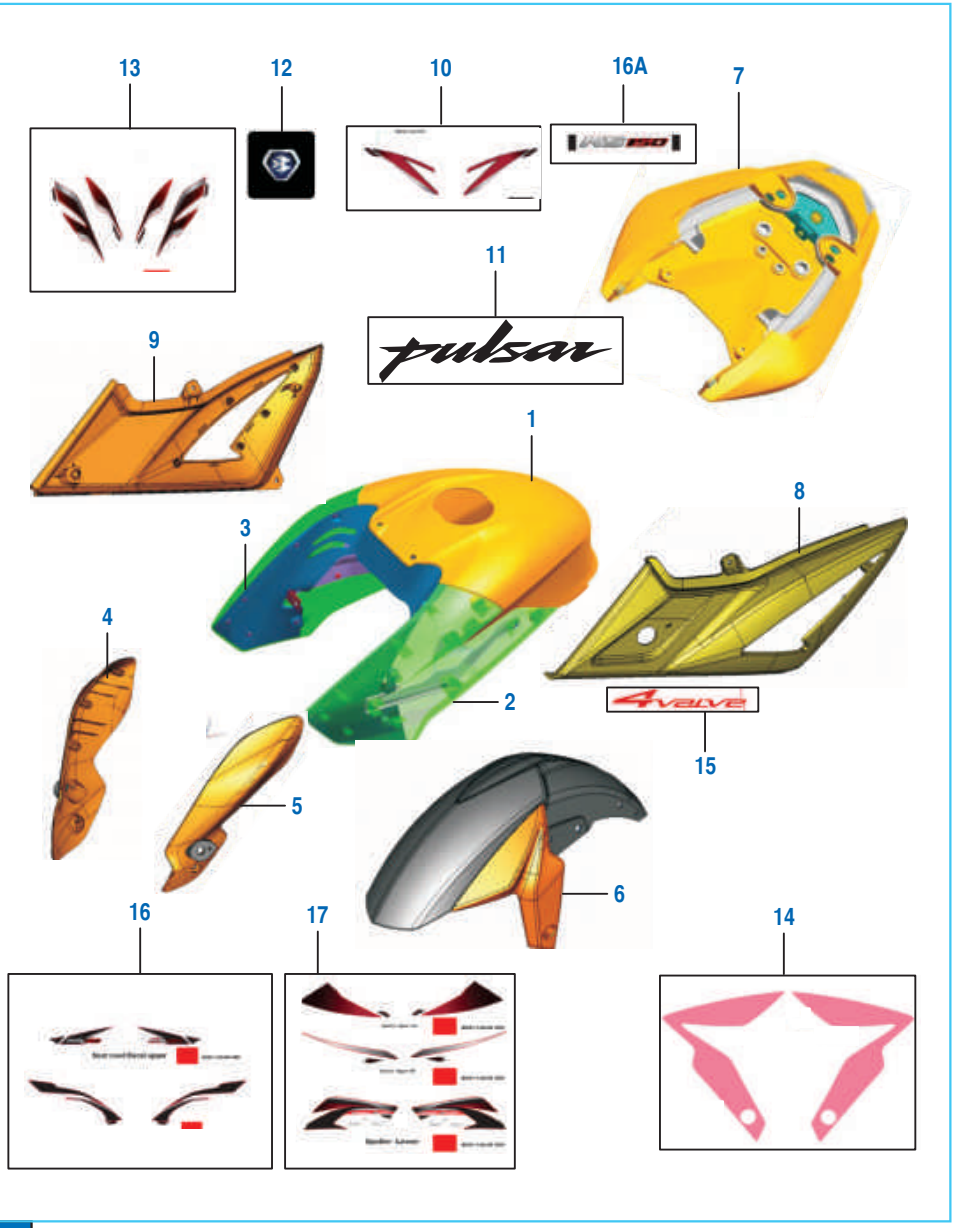

No.	Part No.	Description	Qty. 150 NS	Qty. AS 150	Remarks
7	52 JF00 80	Seat Cowl - Blue	1	--	
	52 JF00 82	Seat Cowl - Black	1	--	
	52 JF00 81	Seat Cowl - Red	1	--	
	52 JF00 83	Seat Cowl Metallic White	1	--	
8	52 JL00 54	Cover Side LH Assly	1	--	
9	52 JL00 55	Cover Side RH Assly	1	--	
10	36 JL00 53	Kit Dcl Tank Lower P Red	1	--	
	36 JL00 52	Kit Dcl Tank Lower S Blue	1	--	
	36 JL00 68	Kit Dcl Tank Lower M White	1	--	
11	JL 2330 03	3D Decal Tank LH	2	--	
12	JL 2330 02	'B' Logo	1	--	
13	36 JL00 49	Kit Dcl Fairing P Red	1	--	
	36 JL00 48	Kit Dcl Fairing S Blue	1	--	
	36 JL00 63	Kit Dcl Fairing M White	1	--	
14	36 JF00 12	Kit Dcl Fender P Red	1	--	
	36 JF00 11	Kit Dcl Fender S Blue	1	--	
	36 JF00 13	Kit Dcl Fender E Black	1	--	
	36 JF00 14	Kit Dcl Fender M White	1	--	
15	JL 2330 05	Decal Side Cover 4 Valve	2	----	
16	36 JF00 08	Kit Dcl S Cowl P Red	1	--	
	36 JF00 10	Kit Dcl S Cowl S Blue	1	--	
	36 JF00 09	Kit Dcl S Cowl M White	1	--	
16A	JF 2330 18	Dcl S Cowl E Black	2	--	
17	36 JL00 54	Kit Dcl Spoiler P Red	1	--	
	36 JL00 55	Kit Dcl Spoiler S Blue	1	--	
	36 JL00 67	Kit Dcl Spoiler M White	1	--	

FWD Front Wheel Direction

Plate No.: 55

Brand ID: 001MC626 - NS 150 (JF02)
Brand ID: 001MC685 - AS 150 (JF05)

Painted Parts and Decals - AS 150

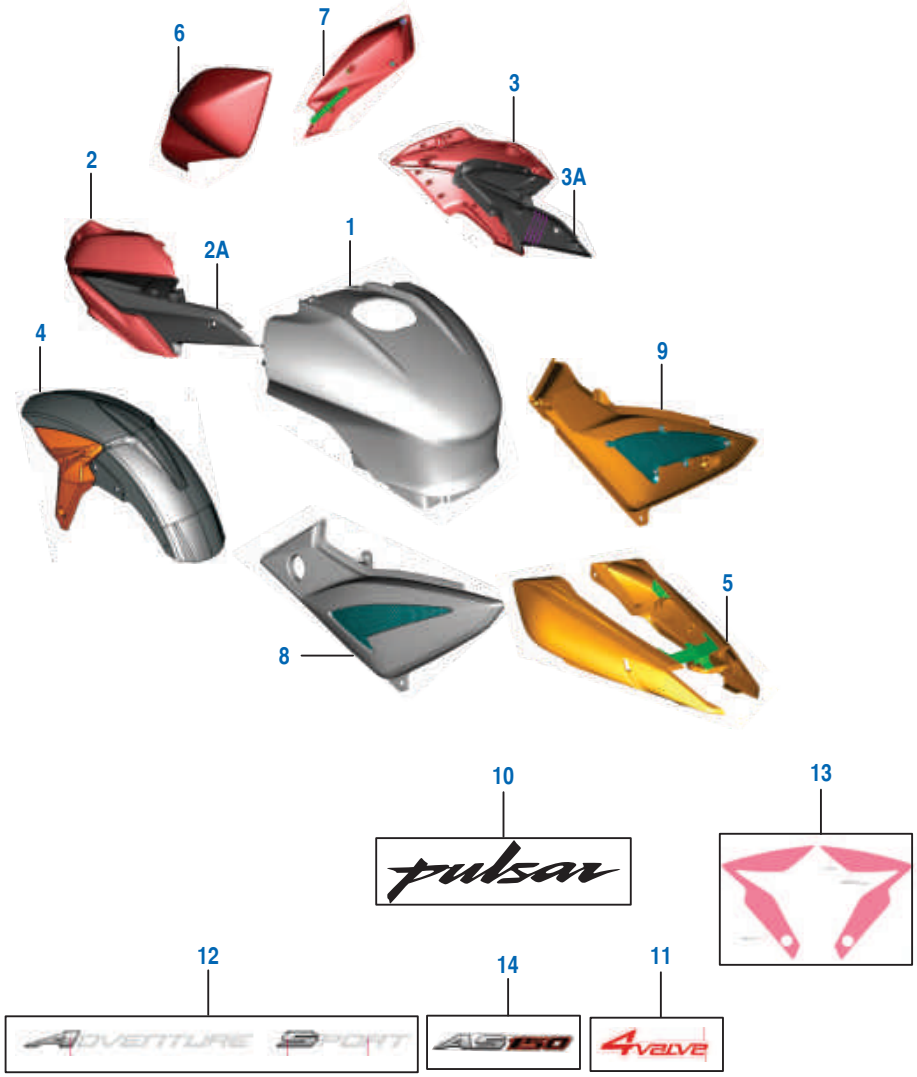

No.	Part No.	Description	Qty. 150 NS	Qty. AS 150	Remarks
1	52 JL03 46	Tank Cover Top Passion Red	--	1	
	52 JL03 47	Tank Cover Top Saffire Blue	--	1	
	52 JL03 48	Tank Cover Top E Black	--	1	
2	52 JL03 52	Side Fairing Front LH Red	--	1	
	52 JL03 53	Side Fairing Front Lh Blue	--	1	
	52 JL03 54	Side Fairing Front LH Blk	--	1	
2A	56 JF66 4X	Side Fairing Rear RH Black	--	1	
3	52 JL03 49	Side Fairing Front RH Red	--	1	
	52 JL03 50	Side Fairing Front RH Blue	--	1	
	52 JL03 51	Side Fairing Front RH Blk	--	1	
3A	56 JF67 4X	Side Fairing Rear LH Black	--	1	
4	52 JF00 69	Fender With Pasion Red Dcl	--	1	
	52 JF00 70	Fender With Pasion Blue Dcl	--	1	
	52 JF00 71	Fender With Pasion Blk Dcl	--	1	
5	52 JF00 66	Seat Cowl Passion Red	--	1	
	52 JF00 67	Seat Cowl Blue	--	1	
	52 JF00 68	Seat Cowl Black	--	1	
6	56 JL14 4R	Side Mask LH P Red	--	1	
	56 JL14 5N	Side Mask LH S Blue	--	1	
	56 JL14 X3	Side Mask LH E Black	--	1	

FWD Front Wheel Direction

Plate No.: 55

Brand ID: 001MC626 - NS 150 (JF02)
Brand ID: 001MC685 - AS 150 (JF05)

Painted Parts and Decals - AS 150

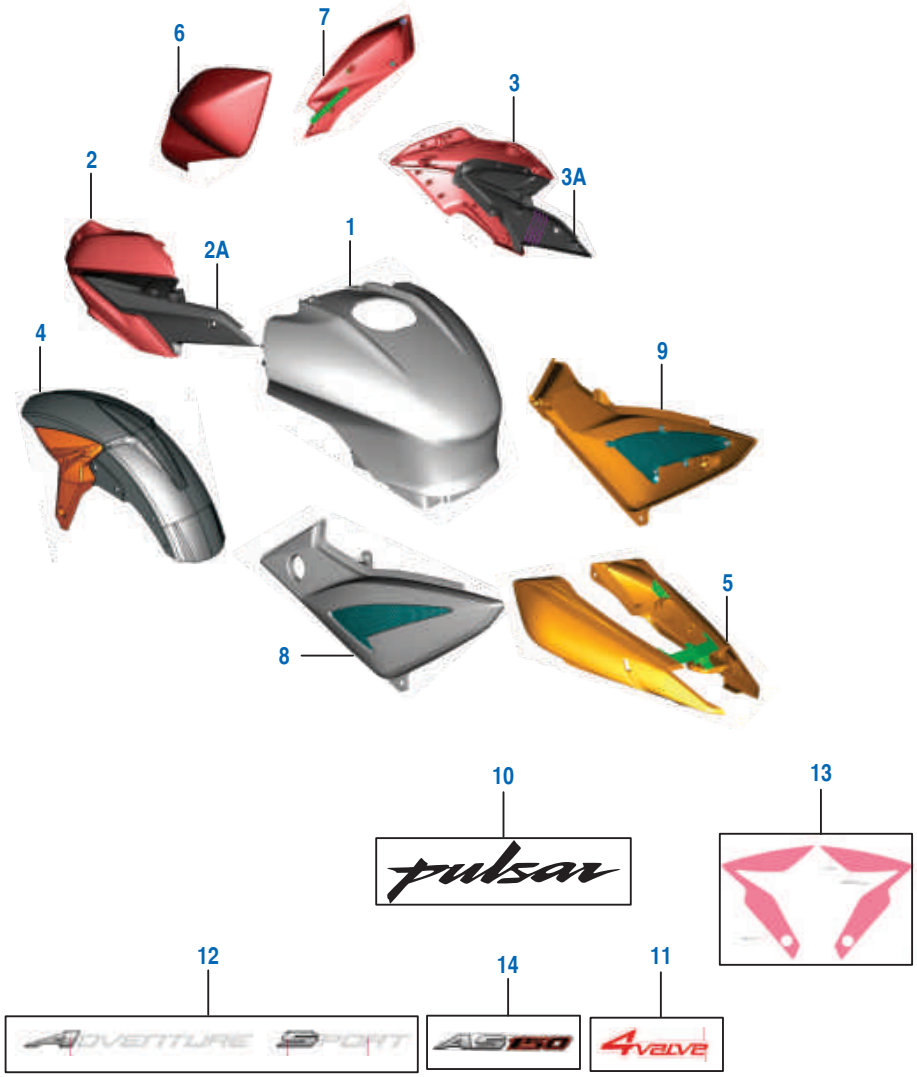

No.	Part No.	Description	Qty. 150 NS	Qty. AS 150	Remarks
7	56 JL15 4R	Side Mask RH P Red	--	1	
	56 JL15 5N	Side Mask RH S Blue	--	1	
	56 JL15 X3	Side Mask RH E Black	--	1	
8	52 JL00 54	Cover Side LH Assly	--	1	
9	52 JL00 55	Cover Side RH Assly	--	1	
10	JL 2330 03	3D Decal Tank	--	2	
11	JL 2330 05	Decal Side Cover 4 Valve	--	2	
12	JL 2331 53	Decal Adventure	--	2	
13	36 JF00 28	Kit Dcl Fender P Red	--	1	
	36 JF00 30	Kit Dcl Fender S Blue	--	1	
	36 JF00 13	Kit Dcl Fender Black	--	1	
14	36 JF00 09	Seat Cowl Decal	--	1	

FWD Front Wheel Direction

Sr No	Kit Part No.	Kit Description	Consisting of Following Parts		
			Part No.	Description	Qty/Kit
	36JF0001	KIT ASSLY CYL HEAD	JE511024	HEAD CYLINDER MACHINED K11	1
			39166005	STUD - M8	2
			JE511052	NOZZLE HEAD - K11	1
			JB511018	SLEEVE SPARK PLUG	1
			39260801	SCREW - GRUB :- M5 X 0.8 X 7	1
			39128321	RING - O	1
			39262921	O-RING	1
	36JF0002	KIT ASSLY BLOCK-PISTON	JE521026	CYLINDER BLOCK K11	1
			JE521210	ASSEMBLY PISTON K11	1
	36JF0003	KIT ASSLY MAGNETO	JE541237	COVER MAGNETO K11	1
			JV541207	CAP TDC FINDER	1
			JL541223	LABEL B-BAJAJ	1
			JA541005	BUSH BENDIX	1
	36JF0004	KIT ASSLY CL COVER	JE541236	COVER CLUTCH SIDE K11	1
			JE541232	PLUG CLUTCH COVER K11	1
			JE541267	LABEL CLUTCH COVER K11	1
	36JF0005	KIT CHAIN GUIDE	JE541032	CHAIN GUIDE SLACK SIDE K11	1
			JE521021	CHAIN GUIDE TIGHT SIDE K11	1
	36JF0006	KIT CHAIN SPROCKET	JF141000	CHAIN O RING TYPE (K11)	1
			JZ141005	SPROCKET REAR-45 T	1
			JV551000	SPROCKET OUTPUT (15T)	1
	36JF0031	KIT CYL COMP FORK-K11	JF151035	SEAT PIPE	1
			30181020	PISTON RING	1
			JZ121013	CAP OIL LOCK	1
			DM181008	REBOUND SPRING	1
	36JF0007	KIT BOSS KICK	JE621205	BOSS KICK LEVER K11	1
			JZ621203	SPRING KICK LEVER	1
			30101236	BALL STEEL	1
			22150241	WASHER - PLAIN	1
			30101235	PIN	1
			39085517	E-TYPE CIRCLIP	1
	36JF0025	KIT VALVE REPAIR	JD511203	SEAT VALVE SPRING	2
			39201719	SEAL VALVE STEM	2
			JE511216	SPRING VALVE -K11	2
			JD511205	RETAINER VALVE SPRING	2
			DG101029	COTTER VALVE	4
	36JF0026	KIT PISTON RING	JZ521204	RING TOP PISTON DIA 56	1
			JE521213	RING 2ND K11	1
			JZ521206	RING OIL PISTON DIA 56	1

Sr No	Kit Part No.	Kit Description	Consisting of Following Parts		
			Part No.	Description	Qty/Kit
	36JF0027	KIT ASSLY CRANKCASE LH K11	JE541022	CRANKCASE MAGNETO SIDE K11	1
			59200036	6203 HN3 C3 BALL BEARING	1
			39171519	OIL SEAL 22X35X7	1
			39256220	NEEDLE ROLLER BRG.	1
			JA541005	BUSH BENDIX	1
			39219019	OIL SEAL	1
			JZ541005	NOZZLE OIL JET	1
	36JF0029	KIT ASSLY CCASE RH K11	JE541021	CRANKCASE CLUTCH SIDE K11	1
			59200036	6203 HN3 C3 BALL BEARING	1
			39256220	NEEDLE ROLLER BRG.	1
			PF541018	BUSHING DRUM BM150 4 SPD	1
			BA102004	PLUG	1
			JY541038	BUSH	1
	36JF0009	KIT S COWL DCL M WHITE	JF233021	SEAT COWL DECAL AS 150 LH/RH	2
	36JF0008	KIT S COWL DCL P RED	JF233000	SEAT COWL LOWER DECAL LH	1
			JF233001	SEAT COWL LOWER DECAL RH	1
			JF233002	SEAT COWL UPPER DECAL LH	1
			JF233003	SEAT COWL UPPER DECAL RH	1
	36JF0009	KIT S COWL DCL M WHITE	JF233006	SEAT COWL LOWER DECAL LH	1
			JF233007	SEAT COWL LOWER DECAL RH	1
			JF233008	SEAT COWL UPPER DECAL LH	1
			JF233009	SEAT COWL UPPER DECAL RH	1
	36JF0010	KIT S COWL DCL S BLUE	JF233012	SEAT COWL DECAL LH	1
			JF233013	SEAT COWL LOWER DECAL RH	1
			JF233014	SEAT COWL DECAL UPPER LH	1
			JF233015	SEAT COWL DECAL UPPER RH	1
	JF233018	KIT S COWL DCL E BLACK	JF233018	SEAT COWL DECAL UPPER	2
	36JF0011	KIT FENDER DCL S BLUE	JF233016	FENDER DECAL LH	1
			JF233017	FENDER DECAL RH	1
	36JF0012	KIT FENDER DCL P RED	JF233004	FENDER DECAL LH	1
			JF233005	FENDER DECAL RH	1
	36JF0013	KIT FENDER DCL E BLACK	JF233019	FENDER DECAL LH	1
			JF233020	FENDER DECAL RH	1
	36JF0014	KIT FENDER DCL M WHITE	JF233010	FENDER DECAL LH	1
			JF233011	FENDER DECAL RH	1
	36JF0028	KIT FENDER DCL P RED-K16B	JF233023	FENDER DECAL LH	1
			JF233024	FENDER DECAL RH	1
	36JF0030	KIT FENDER DCL S BLUE-K16B	JF233025	FENDER DECAL LH	1
			JF233026	FENDER DECAL RH	1

Sr No	Kit Part No.	Kit Description	Consisting of Following Parts		
			Part No.	Description	Qty/Kit
	36JL0026	KIT FAIRING DCL-BLACK	JL233000 JL233001	DECAL FAIRING LH DECAL FAIRING RH	1 1
	36JL0049	KIT DCL FAIRING-P RED	JL233077 JL233078 JL233079 JL233080	FAIRING UPPER DECAL LH FAIRING UPPER DECAL RH FAIRING LOWER DECAL LH FAIRING LOWER DECAL RH	1 1 1 1
	36JL0063	KIT DCL FAIRING-M WHITE	JL233093 JL233094 JL233095 JL233096	FAIRING UPPER DECAL LH FAIRING UPPER DECAL RH FAIRING LOWER DECAL LH FAIRING LOWER DECAL RH	1 1 1 1
	36JL0048	KIT DCL FAIRING-S BLUE	JL233109 JL233110 JL233111 JL233112	FAIRING UPPER DECAL LH FAIRING UPPER DECAL RH FAIRING LOWER DECAL LH FAIRING LOWER DECAL RH	1 1 1 1
	36JL0054	KIT DCL SPOILER-P RED	JL233083 JL233084 JL233085 JL233086	SPOILER UPPER DECAL LH SPOILER UPPER DECAL RH SPOILER LOWER DECAL LH SPOILER LOWER DECAL RH	1 1 1 1
	36JL0067	KIT DCL SPOILER-M WHITE	JL233099 JL233100 JL233101 JL233102	SPOILER UPPER DECAL LH SPOILER UPPER DECAL RH SPOILER LOWER DECAL LH SPOILER LOWER DECAL RH	1 1 1 1
	36JL0055	KIT DCL SPOILER-S BLUE	JL233115 JL233116 JL233117 JL233118	SPOILER UPPER DECAL LH SPOILER UPPER DECAL RH SPOILER LOWER DECAL LH SPOILER LOWER DECAL RH	1 1 1 1
	36JL0053	KIT DCL TANK LOWER-P RED	JL233081 JL233082	TANK LOWER DECAL LH TANK LOWER DECAL RH	1 1
	36JL0068	KIT DCL TANK LOWER-M WH.	JL233097 JL233098	TANK LOWER DECAL LH TANK LOWER DECAL RH	1 1
	36JL0052	KIT DCL TANK LOWER-S BLUE	JL233113 JL233114	TANK LOWER DECAL LH TANK LOWER DECAL RH	1 1
	36JF0021		DH 12 1067	NEEDLE JET PILOT JET MAIN JET JET HOLDER	1 1 1 1
	36JF0022		DH 12 1088 DH 12 1130	O-RING O-RING	1 1

Sr No	Kit Part No.	Kit Description	Consisting of Following Parts		
			Part No.	Description	Qty/Kit
			DH 12 1086 DH 12 1087	SPRING ADJUSTER WASHER	1 1 1
	36JF0023		 DH 12 1051 DJ 12 1013 DH 12 1160 DH 12 1048 DH 12 1052 DH 12 1050 DH 12 1049 DH 12 1047 DH 12 1065 	PISTON VALVE ASSEMBLY E-RING SPRING RING (SHIM) DIAPHRAGM WASHER SPRING (CO) PLATE RING(DIAPHRAGM HOLDING) SCREW JET NEEDLE	1 1 1 1 1 1 1 1 1 2 1
	DH121170		DH 12 1044 DH 12 1176	DIAPHRAGM COVER SCREW	1 2
	36JF0024		 DD 12 1065 DH 12 1163 DH 12 1077	IDLE ADJUSTER ASSY WASHER SPRING PACKING	1 1 1 1

Amendment Sheet

AMENDMENT SHEET (PARTS ADDED)					
SR. NO.	PART NUMBER	DESCRIPTION	QTY.	PAGE NO.	FIGURE NO.

Amendment Sheet

AMENDMENT SHEET (PARTS DELETED)					
SR. NO.	PART NUMBER	DESCRIPTION	QTY.	PAGE NO.	FIGURE NO.

Part Number	Figure No.	Page No.
01100905	20	20
01170122	16	68
14151033	13	34
22150241	14	28
30101142	18	30
30101195	3	32
30151033	4	62
30151069	23	68
30151075	5	68
30151105	21	68
30181025	4	74
30181026	5	74
30181029	17	74
30191038	11	70
30191048	3	102
30201064	4	102
31101173	7	12
31161078	20	80
31161078	29	82
31201079	5	70
31201081	7	24
39019811	11	92
39019811	12	70
39019911	22	70
39021111	17	94
39024011	15	34
39026512	10	90
39032615	11	56
39042215	11	58
39045411	11	52
39045411	17	70

Part Number	Figure No.	Page No.
39055302	12	52
39059417	2	8
39069415	18	70
39072211	9	84
39073817	3	28
39078912	16	70
39080708	19	70
39080808	13	20
39080808	13	70
39098717	4	16
39099206	7	18
39099311	6	28
39099906	3	26
39099906	6	32
39099906	11	24
39100006	2	10
39104119	10	30
39105515	14	106
39105515	20	54
39118011	3	72
39122515	3	96
39122515	21	70
39122515	9A	106
39128321	4	4
39150711	9	102
39156121	22	30
39166005	6	4
39167121	6A	30
39168904	5	58
39171519	3	24
39176904	2	70

Part Number	Figure No.	Page No.
39177602	6	84
39177802	7	82
39177802	19	80
39178001	16	40
39190701	8	98
39190701	13	100
39194304	10	92
39194404	14	80
39194604	18A	78
39195104	3	46
39195404	18	54
39197015	10	46
39197015	10	106
39201719	3	6
39214124	2	98
39214124	3	100
39214124	13	92
39214124	17	80
39214124	19	82
39219019	6	24
39220011	4	12
39220011	12	34
39220504	10	102
39240817	8	28
39242704	10	72
39245304	9	20
39247504	5	54
39247504	6	70
39249211	14	44
39253515	22	94
39256120	2	12

Part Number	Figure No.	Page No.
39256220	3	22
39256220	4	24
39260801	3	4
39262921	5	4
39266921	14	8
39275821	6A	78
59040031	7	8
59040050	5	2
59110008	5	12
59120003	8	12
59150014	9	12
59200036	2	24
59200036	4	22
59210023	16	24
59210024	18	16
36JF0001	1	4
36JF0002	1	10
36JF0003	1	32
36JF0004	1	30
36JF0005	9	8
36JF0006	2	68
36JF0007	11	28
36JF0008	16	110
36JF0009	14	114
36JF0009	16	110
36JF0010	16	110
36JF0011	14	110
36JF0012	14	110
36JF0013	13	114
36JF0013	14	110
36JF0014	14	110

Part Number	Figure No.	Page No.
36JF0015	7	66
36JF0016	6	66
36JF0017	8	66
36JF0018	14	64
36JF0019	14A	64
36JF0020	16	64
36JF0021	5	40
36JF0022	6	40
36JF0023	8	40
36JF0024	7	40
36JF0025	9	6
36JF0027	1	24
36JF0028	13	114
36JF0029	1A	22
36JF0030	13	114
36JG0011	3	50
36JI0012	5	78
36JL0013	2	48
36JL0015	14A	54
36JL0023	10	40
36JL0024	9	40
36JL0041	24	54
36JL0048	13	110
36JL0049	13	110
36JL0052	10	110
36JL0053	10	110
36JL0054	17	110
36JL0055	17	110
36JL0063	13	110
36JL0067	17	110
36JL0068	10	110

Part Number	Figure No.	Page No.
36JZ0014	3	34
36JZ0014	10	12
36JZ0073	14	74
36JZ0121	6	34
52JF0066	5	112
52JF0067	5	112
52JF0068	5	112
52JF0069	4	112
52JF0070	4	112
52JF0071	4	112
52JF0072	2	108
52JF0073	2	108
52JF0074	2	108
52JF0075	2	108
52JF0076	3	108
52JF0077	3	108
52JF0078	3	108
52JF0079	3	108
52JF0080	7	110
52JF0081	7	110
52JF0082	7	110
52JF0083	7	110
52JF0084	6	108
52JF0085	6	108
52JF0086	6	108
52JF0087	6	108
52JL0054	8	110
52JL0054	8	114
52JL0055	9	110
52JL0055	9	114
52JL0191	5	108

Part Number	Figure No.	Page No.
52JL0192	4	108
52JL0193	5	108
52JL0194	4	108
52JL0195	5	108
52JL0196	4	108
52JL0197	5	108
52JL0198	4	108
52JL0346	1	112
52JL0347	1	112
52JL0348	1	112
52JL0349	3	112
52JL0350	3	112
52JL0351	3	112
52JL0352	2	112
52JL0353	2	112
52JL0354	2	112
52JZ0264	1	20
56JF664X	2A	112
56JF674X	3A	112
56JL023G	9	98
56JL0401	2	78
56JL144R	6	112
56JL145N	6	112
56JL14X3	6	112
56JL154R	7	114
56JL155N	7	114
56JL15X3	7	114
AN101347	10	62
AN111015	13	38
AP201025	18	102
BA132122	6	22

Part Number	Figure No.	Page No.
BF561219	4	20
CB121042	12	40
CF111019	17	38
CS101128	11	8
DD101097	12	28
DD111011	12	38
DD111012	10	38
DD111018	17A	38
DD141022	17	78
DD201002	12	98
DE151006	7	62
DE191010	10	64
DE191011	11	64
DE191028	7	64
DE191029	6	64
DE191033	15	64
DF161102	12	58
DG101029	4	6
DG101339	1A	70
DG121002	10	42
DG161124	2	58
DG171015	14	52
DG171016	4	52
DG171017	15	52
DG171018	5	52
DG171019	6	52
DG181008	8	72
DG181008	22	74
DG191048	20	70
DH101048	6	8
DH101048	6	14

Part Number	Figure No.	Page No.
DH101195	6	12
DH101264	8	24
DH101380	7	38
DH101380	10	24
DH101383	20	30
DH101392	10	8
DH101509	18	20
DH101607	5	44
DH101648	14	34
DH102117	11	30
DH102118	12	4
DH111013	15	38
DH121063	14	40
DH121064	13	40
DH151029	15	70
DH161146	16	58
DH181015	16	74
DH191006	9	70
DH191013	4	70
DH191062	4	64
DH201079	3	88
DH201080	3A	88
DJ101064	7	44
DJ151042	14	70
DJ151069	2	66
DJ151070	3	66
JF131601	20	68
DJ161069	3	56
DJ161228	11	32
DJ161229	3	76
DJ161229	4	80

Part Number	Figure No.	Page No.
DJ161229	18	98
DJ181029	15	94
DJ181064	16	94
DJ181087	8	74
DJ181088	7	74
DJ181089	6	74
DJ191029	2	64
DJ191030	3	64
DJ191031	5	64
DJ201100	9	64
DJ201173	17	56
DJ201246	13	72
DJ221019	1	104
DK101225	14	4
DK101340	15	4
DK121045	2	40
DK121047	15	40
DK121058	3	40
DK151026	2	60
DK181028	21	74
DK201044	21	92
DK211007	3	48
DK221024	2	104
DM181010	11	74
DP101116	10	34
DP101165	6	10
DP161145	10	100
DP161145	16	98
DS101117	4	28
DS101154	3	14
DS121126	11	42

Part Number	Figure No.	Page No.
DS141012	3	84
DS141012	6	50
DS151073	9	68
DS161125	2	56
DS161287	6	48
DS181070	9	74
DS181072	10	74
DS211004	5	50
DT161005	16A	72
DT171075	19A	78
DT181010	13	82
DT181310	20	94
DT181311	21	94
DT232601	18A	72
DT401405	19A	72
DT402006	2	102
DU101213	20	16
DX161066	7	50
EC401030	9	94
EC401030	22	92
FD101078	2	26
FD211006	5	48
GL621414	5	36
JA541005	5	24
JA541005	7	32
JA541010	5	22
JA541010	8	14
JA541012	8	22
JA541014	7	22
JA541021	15	24
JA541211	14	30

Part Number	Figure No.	Page No.
JA541225	13	30
JA551002	3	16
JA551004	7	16
JA551009	17	16
JA551406	2	34
JA581314	11	40
JA591040	15	44
JA621002	5	28
JA621006	2	28
JA621206	13	28
JB131224	17	68
JB181223	4	50
JB181223	5	86
JB511018	2	4
JC151004	22	68
JC151006	24	68
JC151012	25	68
DK181025	20	74
JC191007	24	70
JC191008	23	70
JC191011	25	70
JD131210	15	68
JD131212	10	68
JD131811	6	62
JD141003	1	68
JD191006	8	48
JD351206	14	38
JD401007	11	98
JD402212	19	102
JD402217	7	102
JD521002	3	10

Part Number	Figure No.	Page No.
JD551400	11	34
JD561002	5	18
JD561004	3	18
JD561006	2	18
JD561009	10	18
JD561011	6	18
JD561204	8	20
JD561416	17	20
JE351009	2	38
JE351006	1	38
JE351208	3	38
JE351212	11	38
JE351214	8	38
JE351216	9	38
JE351232	3A	38
JE351236	8A	38
JE351238	9A	38
JE351600	1	36
JE351800	17	40
JE501010	1	22
JE511036	1	2
JE511038	3	2
JE511047	4	2
JE511052	13	4
JE511053	2	2
JE511060	10	6
JE511208	1	6
JE511209	2	6
JE511212	5	6
JE511213	6	6
JE511221	7	6

Part Number	Figure No.	Page No.
JE511225	8	6
JE511233	8	8
JE511234	5	8
JE511241	4	8
JE511243	1	8
JE621004	15	28
JE521016	12	8
JE531025	1	12
JE531201	1	14
JE541028	11	22
JE541048	17	24
JE541213	16	30
JE541214	17	30
JE541228	9	32
JE541234	7	30
JE541240	8	32
JE541241	15	30
JE541242	21	30
JE541243	6	38
JE541244	3	30
JE541249	19	30
JE541267	6	30
JE551001	1	16
JE551007	8	16
JE551200	6	16
JE551201	5	16
JE551202	2	16
JE551203	5A	16
JE551205	10	16
JE551206	12	16
JE551208	11	16

Part Number	Figure No.	Page No.
JE551211	16	16
JE551212	14	16
JE551213	4	14
JE551213	11	12
JE551214	5	14
JE551215	15	16
JE551216	13	16
JE551408	9	30
JE551411	1	34
JE551413	7	34
JE551414	4	34
JE551415	8	34
JE561003	1	18
JE561004	8	18
JE561200	3	20
JE571003	1	26
JE571004	4	26
JE571007	8	30
JE581004	1	42
JE581006	2	42
JE581010	3	42
JE581011	6	2
JE581011	7	42
JE581014	4	42
JE581045	6	42
JE581047	1	76
JE581068	16	42
JE581233	1	40
JE581239	21	40
JE581406	9	4
JE581407	8	4

Part Number	Figure No.	Page No.
JE591005	2	44
JE591046	4	44
JE591048	1	44
JE621002	1	28
JE621003	9	28
JE621203	10	28
JE621402	4	36
JE621404	3	36
JE621405	9	24
JF111051	1	50
JF111052	5	46
JF111136	1A	50
JF113009	2	54
JF113202	1	58
JF113404	2	46
52JF0063	4	46
JF113411	1	46
JF113412	8	46
JF113808	11	46
JF113809	12	80
JF113814	20	38
JF113822	10	76
JF113823	9	76
JF121004	19	74
JF122004	3	52
JF122006	10	52
JF122012	1	52
JF131008	9	62
JF131009	1	62
JF131009	3	60
JF131010	1	60

Part Number	Figure No.	Page No.
JF131206	4	60
JF131209	14	68
JF131210	13	68
JF131222	5	60
JF131600	26	68
JF131800	5	62
JF131802	12	64
JF131806	1	66
JF131807	8	64
JF131901	12A	64
JF151018	1	74
JF151019	18	74
JF151025	2	72
JF151027	6	72
JF151031	2	74
JF151032	3	74
JF151033	13	74
JF151034	15	74
JF151036	12	74
JF161001	1	70
JF161201	2	88
JF161202	1	88
JF161206	1A	88
JF171004	2	80
JF171009	2A	80
JF171800	11	78
JF181005	5	90
JF181211	1	90
JF181216	6	76
JF181217	4	76
JF181253	11	102

Part Number	Figure No.	Page No.
JF181402	4	56
JF181403	1	56
JF181409	4	90
JF231201	1	106
JF231202	2	106
JF231203	6A	106
JF233018	16A	110
JF401017	9	92
JF401802	13	102
JF401803	15	102
JF402000	4	38
JF402201	6	102
JF402203	1	102
JF402209		102
JF402400	1	86
JF402404	8	62
JF402404	3C	88
JF402405	3B	88
JF561412	10	20
JF561418	12	20
JF561414	16	20
JF561403	11	20
JF561404	14	20
JF561405	15	20
JG131219	6	68
JG151022	17	72
JG161008	12A	72
JG161010	1	64
JG181235	3	92
JG181236	2	92
JG181238	2	86

Part Number	Figure No.	Page No.
JG181259	12	86
JG191008	4	48
JG232601	9	48
JG232606	10	48
JG401808	12	102
JG531220	2	14
JG531220	3	8
JG551428	3A	34
JG551447	5	34
JG571024	13	24
JG581056	7	2
JG581056	9	42
JG591038	3	44
JG591039	6	44
JL111103	2	50
JL111109	7	52
JL113000	8	54
JL113002	1	54
JL113012	3	54
JL113013	12	54
JL113014	14	54
JL113015	16	54
JL113016	15	54
JL113020	22	54
JL113026	13	54
JL113027	17	54
JL113032	23	54
JL113033	4	54
JL113033	7	70
JL113034	7	54
JL113036	21B	54

Part Number	Figure No.	Page No.
JL113201	9	58
JL113202	17	58
JL113207	7	58
JL113209	15	58
JL113210	3	58
JL113212	8	58
JL113223	18	58
JL113803	13	98
JL113809	8	50
JL113809	15	42
JL113810	24	98
JL113811	22	98
JL113812	23	98
JL113834		56
JL122008	13	52
JL131810	10	70
JL131811	12	56
JL151021	1	72
JL151023	18	72
JL151028	5	72
JL151034	7	72
JL151035	9	72
JL151038	2A	72
JL161003	15	72
JL161005	3	70
JL161006	8	70
JL161008	16	72
JL161011	11	72
JL161012	12	72
JL161015	11A	72
JL171018	20	78

Part Number	Figure No.	Page No.
JL171019	19	78
JL171020	21	78
JL171024	5	80
JL171024	17	82
JL171024	21	82
JL171035	12	78
JL171037	8	78
JL171040	13	80
JL171040	20	82
JL171048	18	80
JL171049	4	78
JL171057	1	80
JL171060	14	78
JL171061	11	80
JL171062	10	80
JL171063	9	78
JL171070	7	80
JL171070	15	82
JL171071	8	80
JL171071	16	82
JL171078	24	80
JL171081	1	78
JL171096	22	78
JL171800	13	78
JL171801	16	78
JL171802	10	78
JL171803	15	78
JL181008	1	92
JL181025	9	86
JL181203	6	92
JL181209	13	56

Part Number	Figure No.	Page No.
JL181214	4	84
JL181235	18	92
JL181236	15	92
JL181237	17	92
JL181241	4	86
JL181245	3	94
JL181247	5	92
JL181249	16	92
JL181256	7	76
JL181264	14A	102
JL181288	1	84
JL181297	2	90
JL181304	2A	86
JL181407	6	90
JL181408	7	90
JL181410	12	90
JL181411	5	56
JL181416	14	94
JL181417	5	94
JL181426	1	94
JL181432	18	82
JL181433	16	56
JL181436	14	56
JL181437	11	86
JL181437	13	86
JL181443	4	82
JL181444	3	82
JL181447	2	82
JL181448	5	82
JL181449	1	82
JL181450	6	82

Part Number	Figure No.	Page No.
JL181453	4	94
JL181456	11	82
JL181457	12	82
JL191001	1	48
JL191004	7	48
JL191008	22	80
JL191009	23	80
JL231202	6	106
JL231204	8	106
JL231206	19	54
JL231209	7A	106
JL231404	3	106
JL231405	4	106
JL231600	23	72
JL231601	22	72
JL232604	12	48
JL232805	6	98
JL232808	20	98
JL232810	1	100
JL232811	8	100
JL233002	12	110
JL233003	10	114
JL233003	11	110
JL233005	11	114
JL233005	15	110
JL233153	12	114
JL401002	7	98
JL401002	12	100
JL401003	5	96
JL401004	6	96
JL401005	2	96

Part Number	Figure No.	Page No.
JL401006	1	96
JL401016	21	98
JL401017	8	94
JL401400	20	72
JL401401	21	72
JL401402	10	58
JL401403	19	72
JL401409	20A	72
JL401410	21A	72
JL401411	13A	72
JL402201	5	102
JL402207	17	102
JL402403	8	86
JL402602	6	78
JL403600	14	58
JL541223	5	32
JL541227	12	30
JL561409	19	20
JL561410	21	20
JL581027	4	40
JL581056	8	42
JL581203	22	40
JL581204	18	40
JL581205	19	40
JL581206	20	40
JL591156	9	44
JL591157	8	44
JL591165	10	44
JL74015M	1	108
JL74015N	1	108
JL74015P	1	108

Part Number	Figure No.	Page No.
JL7401X3	1	108
JN131003	2	62
JN131203	7	68
JN131603	8	62
JN351604	16	102
JU232800	2	100
JU232800	3	98
JV521006	15	8
JV541007	4	30
JV541007	4	32
JV541007	10	32
JV541007	18	24
JV541207	2	32
JV541208	2	30
JV541217	2	36
JV541217	5	30
JV541217	13	8
JV541218	10	4
JV551000	19	16
JW131807	5	66
JW131810	4	66
JW171015	8	76
JW351400	4	10
JW561206	2	20
JY151011	23	74
JY181284	6	100
JY181284	12	94
JY541039	9	18
JZ113061	21A	54
JZ122008	8	52
JZ122012	9	52

Part Number	Figure No.	Page No.
JZ511016	7	4
JZ551210	9	16
JZ551412	9	34
JZ561002	4	18
JZ621000	7	28
KACA0616	6	56
KACA0620	6	80
KACA0820	6	54
KACA0850	13	106
KACB0516	3	78
KCBA0605	11	76
KACB0622	7	106
KACB0830	5	98
KACb0830	9	106
KACB0835	19	92
KACH0514	6	86
KACH0514	19A	92
KADA0510	13	44
KADA0512	21	80
KADA0512	23	82
KADA0616	5	76
KADA0630	12	42
KADA0630	12	44
KADA0630	22	82
KADA0635	11	44
KADA0640	11	106
KADB0516	3	80
KADB0516	13	58
KADB0616	10	94
KADD0610	11	100
KADD0610	17	98

Part Number	Figure No.	Page No.
KADD0618	16	38
KADD0825	10	98
KADD0840	7	14
KADE0610	18A	54
KADF0612	19	56
KADF0614	7	84
KADF0614	8	56
KADF0614	18	38
KADF0618	19	38
KADF0820	7	56
KADF0820	18	78
KADF0880	7	46
KADF0885	12	106
KADF0890	6	46
KADM0610	13	42
KADM0610	15	80
KADQ0625	5	42
KAEG0620	18	94
KAEM0610	12	46
KAEM0614	14	102
KBAB0608	6A	38
KBBA0514	4	100
KBBB0512	10	56
KBRD4213	6	84
KBUA0514	2	76
KBUA0516	12	92
KBUA0612	2	84
KBUA0616	14	92
KBUB0410	8	90
KBUB0516	16	80
KBUB0625	13	94

Part Number	Figure No.	Page No.
KBUC0514	18	56
KBUC0514	13A	82
KBUC0625	7	100
KCAA0504	3	86
KCJD1212	11	48
KCGA0505	5	100
KCGA0505	7	78
KCGD0505	15	98
KCGD0606	14	98
KCGD1010	4	96
KCJd1212	11	62
KDAA0408	8	82
KDAA0510	9	56
KDAA0510	10	86
KDBA0512	6	94
KDBA0512	10	82
KDBA0512	14	82
KDBA0512		92
KDBA0613	11	94
KDBB0512	24	82
KFBA0412	3	12
KPBB6202	4	68
KPBB6301	3	62
KPBB6302	3	68
KPBC6004	8	68
LAC00016	10	54
LAC00019	2	52
LAC00020	4	72
LAC00022	9	80
LAC00022	28	82
LAC00034	26	82

Part Number	Figure No.	Page No.
LAC00035	5	106
LAC00036	11	90
LAC00037	9	90
LAC00052	5	38
LAC00054	3	90
LAC00063	25	82
LAC00069	21	16
LAD00037	13	64
LAD00120	19	94
LAD00134	4	58
LAD00135	6	58
LAE00015	9	14
LAE00015	9	22
LAE00024	12	24
LAE00025	10	22
LBR00002	7	94
LBR00002	8	92
LBR00002	9	82
LBS00002	4	92
LBU00009	1	98
LBU00023	10	84
LBU00030	2	94
LCA00008	4	98
LCB00005	12	68
LCG00008	9	100
LCG00014	9	46
LCG00016	13	46
LCJ00002	19	68
LDA00007	5	84
LDA00007	7	92
LDA00013	9	54

Part Number	Figure No.	Page No.
LDB00007	7	86
LDB00023	8	84
LDB00023	14	42
LDB00023	15	56
LDB00023	27	82
LDB00029	18	68
LDB00044	5	20
LJA00004	14	24
LJA00010	11	4
NEWPART	5	10
PA181292	23	92
PA181293	24	92
PA401600	8	102
PA402204	19	98
PA402204	20	102
PA561209	6	20
PF131220	11	68
PF541018	2	22
YJL02006	20	92
YJZ14002	6	36
YJZ14003	7	36

Part Number	Figure No.	Page No.

Part Number	Figure No.	Page No.